INSTRUCTION MANUAL

GREENLEE®

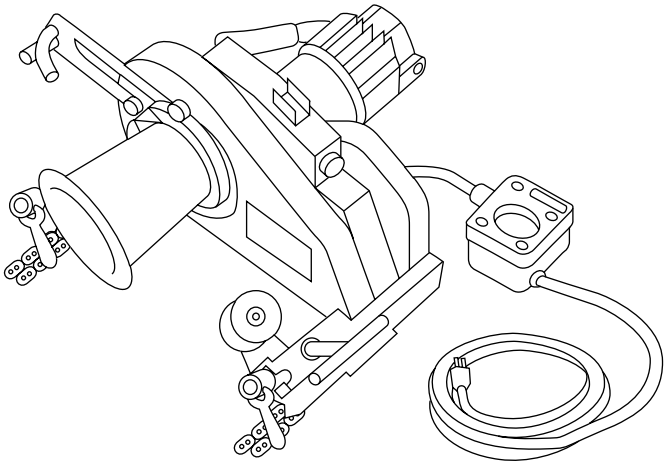

6000-SERIES

Super Tugger®

CABLE PULLERS

Effective with Serial Code YF 2000 for 115 Volt Pullers and Serial Code ACN for 220 Volt Pullers

Read and **understand** all of the instructions and safety information in this manual before operating or servicing this tool.

Table of Contents

Description

The Greenlee Super Tugger® cable puller is intended to be used to pull cable through conduit and in tray. The Super Tugger® will develop 28.9 kN (6500 lbs) of pulling force. See a Greenlee catalog for sheaves, pulling rope, and other cable pulling accessories rated for use with the Super Tugger® to create an entire cable pulling system.

No single manual can provide instructions for every cable pulling application. This manual contains general information for pulling cable. Illustrations of some typical setups are also provided.

Safety

Safety is essential in the use and maintenance of Greenlee tools and equipment. This instruction manual and any decals on the tool provide information for avoiding hazards and unsafe practices related to the use of this too. Observe all of the safety information provided.

Purpose of this Manual

This manual is intended to familiarize operators and maintenance personnel with Greenlee 6000-series Super Tugger® cable pullers. This manual should be kept available to operating and maintenance personnel.

KEEP THIS MANUAL

IMPORTANT SAFETY INFORMATION

SAFETY ALERT SYMBOL

This symbol is used to call your attention to hazards or unsafe practices which could result in an injury or property damage. The signal word, defined below, indicates the severity of the hazard. The message after the signal word provides information for preventing or avoiding the hazard.

⚠DANGER

Immediate hazards which, if not avoided, WILL result in severe injury or death.

⚠WARNING

Hazards which, if not avoided, COULD result in severe injury or death.

⚠CAUTION

Hazards or unsafe practices which, if not avoided, MAY result in injury or property damage.

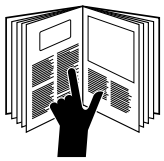

⚠DANGER

Read and understand all of the instructions and safety information in this manual before operating or servicing this tool.

Failure to observe this warning will result in severe injury or death.

⚠DANGER

Do not operate the cable puller in a hazardous environment. Hazards include flammable liquids and gases.

Failure to observe this warning will result in severe injury or death.

⚠WARNING

Electric shock hazard:

Disconnect the cable puller from the power supply before servicing.

Failure to observe this warning can result in severe injury or death.

KEEP THIS MANUAL

IMPORTANT SAFETY INFORMATION

⚠WARNING

Inspect all components of the cable-pulling system. Verify the maximum load-bearing capacity or maximum strength of all structural supports, pulling system components and anchoring systems before setting up the puller. Any component that cannot withstand the maximum cable-pulling forces may break and strike nearby personnel with great force.

Failure to observe this warning can result in severe injury or death.

⚠WARNING

Do not allow anything other than the pulling rope to contact the capstan. A grip, swivel, or other component could break and strike nearby personnel with great force.

Failure to observe this warning can result in severe injury or death.

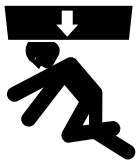

⚠WARNING

Do not stand directly under a vertical pull. Cable could fall suddenly from the conduit, injuring nearby personnel.

Failure to observe this warning can result in severe injury or death.

⚠WARNING

Do not operate puller if the anti-reverse mechanism is not working. If you do not hear the clicking of the anti-reversing pawl when the capstan is rotating, shut the puller off and have it repaired by an authorized Greenlee service center.

Failure to observe this warning can result in severe injury or death.

⚠WARNING

Locate the puller so that it is close to the conduit. Rope, cable, or connectors can break under tension, causing the rope to whip violently.

Failure to observe this warning can result in severe injury or death.

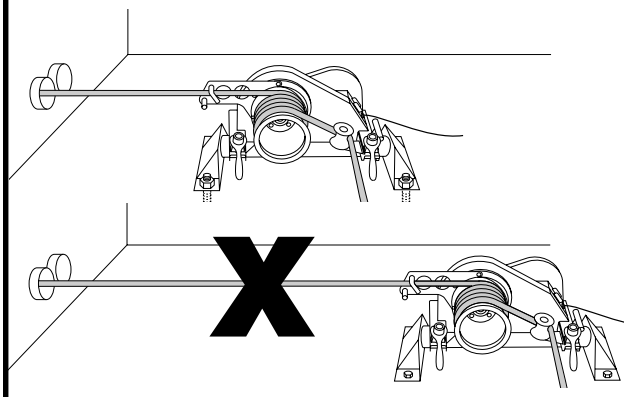

⚠WARNING

An under-rated rope may break and whip violently. Use a double-braided composite rope with the following characteristics:

- Maximum Rated Capacity: at least 28.9 kN (6500 lbs)
- Average Breaking Strength: at least 115.6 kN (26,000 lbs)

Failure to observe this warning can result in severe injury or death.

⚠WARNING

- Check the condition of the entire rope before use. A worn or damaged rope can break under tension and whip violently.
- Do not maintain a stationary rope on a rotating capstan. The wear generated may cause the rope to break under tension and whip violently.

Failure to observe these warnings can result in severe injury or death.

KEEP THIS MANUAL

IMPORTANT SAFETY INFORMATION

⚠WARNING

Attach the pulling rope to the cable with appropriate types of connectors as described in this manual. Select connectors with a maximum rated capacity of at least 28.9 kN (6500 lbs). An under-rated connector can break under tension.

Failure to observe this warning can result in severe injury or death.

⚠WARNING

Keep hands away from the capstan. Rope at the capstan can crush a hand.

Failure to observe this warning can result in severe injury or death.

⚠WARNING

Do not wrap rope around hands, arms, waist or other body parts. Do not stand in spent coils or tailed rope. Hold rope so that it may be released quickly.

Failure to observe this warning can result in severe injury or death.

⚠WARNING

Rope, cable, or a connecting device can break under tension, causing the rope to whip violently.

- Do not allow any unnecessary personnel to remain in the area during the pull.
- Do not allow any personnel to stand in line with the pulling rope.

Failure to observe these warnings can result in serious injury or death.

⚠WARNING

Do not allow the rope to become overlapped on the capstan. If an overlap begins to develop, relax the tailing force immediately and shut off the cable puller.

Failure to observe this warning can result in severe injury or death.

⚠WARNING

Do not operate without chain guards in place.

Failure to observe this warning can result in severe injury or death.

⚠WARNING

Use this tool for manufacturer's intended purpose only. Do not use the cable puller as a hoist or winch.

- The cable puller cannot lower a load.
- The load may fall.

Failure to observe this warning can result in severe injury or death.

⚠WARNING

Inspect puller and accessories before use. Replace any worn or damaged components with Greenlee replacement parts. A damaged or improperly assembled item can break and strike nearby personnel with great force.

Failure to observe this warning can result in severe injury or death.

⚠WARNING

Entanglement hazard:

- Do not operate the cable puller while wearing loose-fitting clothing.
- Retain long hair.

Failure to observe these warnings can result in severe injury or death.

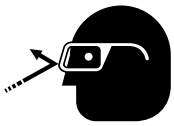

⚠WARNING

Wear eye protection when using this tool.

Failure to wear eye protection can result in severe eye injury from flying debris.

KEEP THIS MANUAL

Grounding Instructions

120-Volt Model

⚠WARNING

Electric shock hazard.

- Do not modify the plug provided with the tool.
- Connect this tool to a grounded receptacle on a 20-amp GFCI-protected circuit.

Failure to observe these warnings can result in severe injury or death.

This tool must be grounded. In the event of a malfunction or breakdown, an electrical ground provides a path of least resistance for the electric current. This path of least resistance is intended to reduce the risk of electric shock.

This tool's electric cord has a grounding conductor and a grounding plug as shown. Do not modify the plug. Connect the plug to a corresponding receptacle that is properly installed and grounded in accordance with all national and local codes and ordinances. Do not use an adapter.

20 Amp/125 Volt Plug and Receptacle

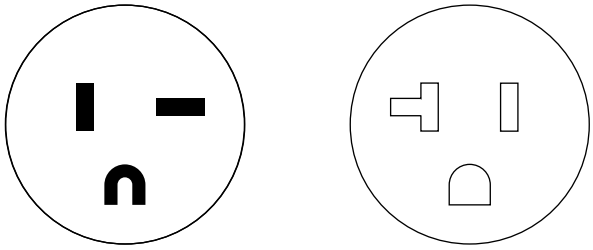

Plug Receptacle

220-Volt Model

⚠WARNING

Electric shock hazard.

- Do not modify the plug provided with the tool.
- Connect this tool to a grounded receptacle on a 10-amp GFCI-protected circuit.

Failure to observe these warnings can result in severe injury or death.

This tool must be grounded. In the event of a malfunction or breakdown, an electrical ground provides a path of least resistance for the electric current. This path of least resistance is intended to reduce the risk of electric shock.

This tool's electric cord has a grounding conductor and a grounding plug as shown. Do not modify the plug. Connect the plug to a corresponding receptacle that is properly installed and grounded in accordance with all national and local codes and ordinances. Do not use an adapter.

10 Amp/250 Volt Plug and Receptacle

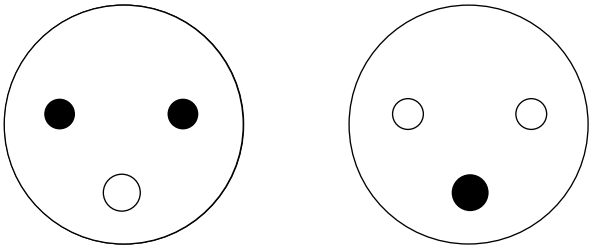

Plug Receptacle

Identification

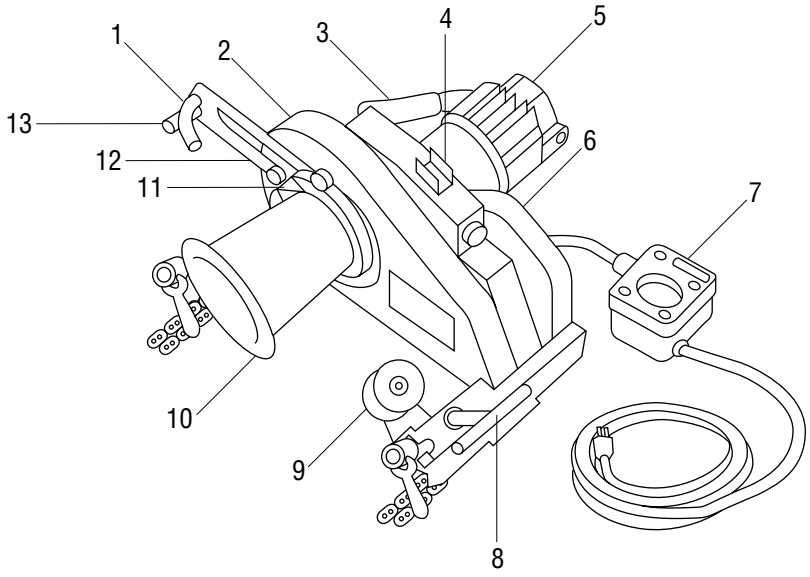

Super Tugger® Identification

1. Entrapment Peg
2. Capstan Chain Guard
3. Handle
4. Guarded ON/OFF Switch and Circuit Breaker
5. Motor
6. Motor Chain Guard
7. Force Gauge with ON/OFF Switch
8. Handle/Cleat
9. Right-Angle Idler Sheave
10. Tapered Capstan
11. Rope Ramp
12. Pivoting Capstan Arm
13. Positioning Peg

Specifications

Weight: ..... 41.7 kg (92 lbs)

Dimensions:

- Length ..... 52.7 cm (20-3/4")
- Width ..... 57.2 cm (22-1/2")
- Height ..... 30.5 cm (12")

Power (120-Volt Model):

- Voltage ..... 120 VAC, 60 Hz
- Current ..... 17 Amps
- Source ..... 20 Amp GFCI-Protected Circuit

Power (220-Volt Model):

- Voltage ..... 220 VAC, 50 Hz
- Current ..... 7.5 Amps
- Source ..... 15 Amp GFCI-Protected Circuit

Maximum Pulling Force: ..... 28.9 kN (6500 lbs)

Speed:

- No load ..... 5 meters/minute (16.5 feet/minute)
- 8900 Newtons (2000 lbs) ..... 3.4 meters/minute (11 feet/minute)
- 17.8 kN (4000 lbs) ..... 2.3 meters/minute (7.5 feet/minute)

Duty Cycle:

- 0 - 22.2 kN (0 - 5000 lbs) ..... Continuous Operation
- 22.2 - 24.5 kN (5000 - 5500 lbs) (alarm will sound) ..... 15 minutes on / 15 minutes off
- 24.5 - 28.9 kN (5500 - 6500 lbs) (alarm will sound) ..... 5 minutes on / 15 minutes off

Pulling Rope:

- Average Breaking Strength ..... 115.6 kN (26,000 lbs) minimum

Cable Pulling Glossary

anchoring system

any item or group of items that keeps a cable pulling component in place during the cable pull

capstan

the hollow cylinder of the cable puller that acts on the pulling rope to generate pulling force

coefficient of friction

the ratio that compares two amounts of force:
(1) the force needed to move an object over a surface and (2) the force holding the object against the surface

This ratio is used to describe how the capstan and the rope work together.

connector

any item, such as a wire grip, clevis, swivel, or pulling grip, that connects the rope to the cable

direct line of pull

the areas next to the pulling rope and along its path; this includes the areas in front of, in back of, and underneath the rope

maximum rated capacity

the amount of pulling tension that any component can safely withstand, rated in kilo-Newtons (metric) or pounds; the maximum rated capacity of every component must meet or exceed the maximum pulling force of the cable puller

Newton

a metric unit of force, equivalent to .225 pounds of force

pipe adapter sheave

attaches to conduit for pulling or feeding cable

pulling grip

connects the rope to the cable; consists of a wire mesh basket that slides over the cable and grips the insulation

pulling force

the amount of pulling tension developed by the cable puller, rated in Newtons (metric) or pounds; a cable puller is usually described by the maximum pulling force that it can develop

resultant force

any force that is produced when two or more forces act on an object; applies to the sheaves of a cable pulling system

rope ramp

a device that works with a tapered capstan; guides the rope onto the capstan to help prevent rope overlap

sheave

a pulley that changes the direction of the rope and cable

stored energy

the energy that accumulates in the pulling rope as it stretches, described in Newtons-meters (metric) or foot-pounds

support structure

any stationary object that a cable pulling system component is anchored to, such as a concrete floor (for the floor mount) or an I-beam (for a sheave)

tail

the portion of the rope that the operator applies force to; this is the rope coming off of the capstan, and is not under the tension of the pull

tailing the rope

the operator's main function; this is the process of applying force to the tail of the pulling rope—see the complete explanation under Principles of Cable Pulling

wire grip

connects the rope to the cable; some use a set screw to clamp onto the conductors of the cable

Cable Pulling Principles

Pulling cable is a complex process. This section of the manual describes and explains four main topics of pulling cable:

- each cable pulling system component
- how these components work together
- forces that are generated
- procedures for the cable puller operator to follow

While reading through this section of the manual, look for components that are shaded in the illustrations. The shading indicates components that are associated with the text.

Greenlee strongly recommends that each member of the cable pulling crew review this section of the manual before each cable pull.

Cable Pulling Systems

Pulling cable requires a system of components. At a minimum, a cable pulling system will include a cable puller, a cable pulling rope, and connectors to join the rope to the cable. Most systems will also include, but are not limited to, a cable puller anchoring system, pulling sheaves and sheave anchoring systems.

The cable puller has a maximum amount of *pulling force*, which is the amount of pulling tension that it develops. Every other component of the pulling system has a maximum rated capacity, which is the amount of pulling tension that it can withstand. The *maximum rated capacity* of every component must meet or exceed the cable puller's maximum pulling force.

Typical Cable Pulling System

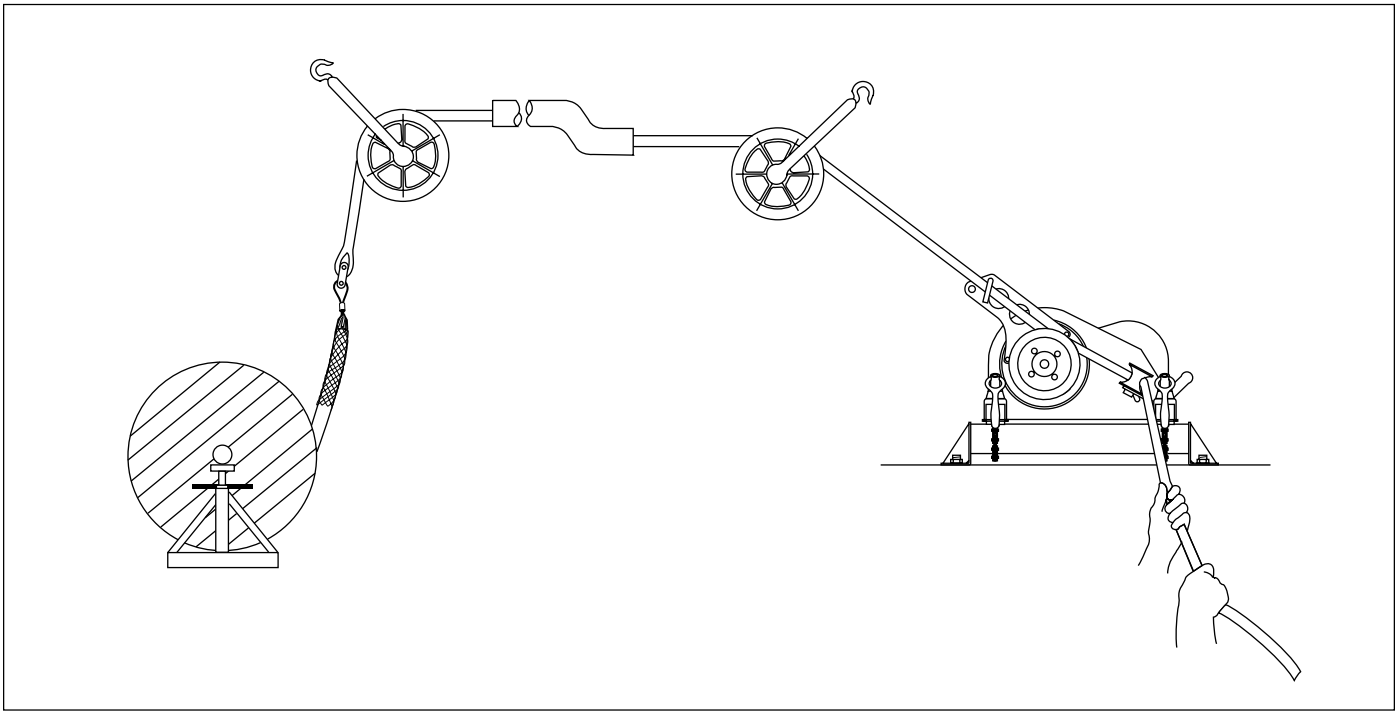

Cable Pulling Principles (cont'd)

Pulling Theory

This section introduces the main ideas involved with pulling cable.

Pulling Resistance

The cable puller must overcome two types of resistance: gravity and friction.

Gravity constantly exerts its force on the vertical portions of the run. When the pulling force is relaxed, gravity attempts to pull the cable downward. Friction develops where the cable contacts the sheaves, conduit and tray. Friction resists any movement, forward or backward, and tends to hold the cables in place.

To accomplish a cable pull, the cable pulling system must develop more force than the combination of gravity and friction.

Generating Pulling Force

To generate pulling force, the capstan works as a *force multiplier.* The operator exerts a small amount of force on the rope. The cable puller multiplies this and generates the pulling force.

This pulling force is applied to the rope, connectors, and cable in order to accomplish the pull. The direction of force is changed, where necessary, with pulling sheaves.

Cable Pulling Theory Illustrated

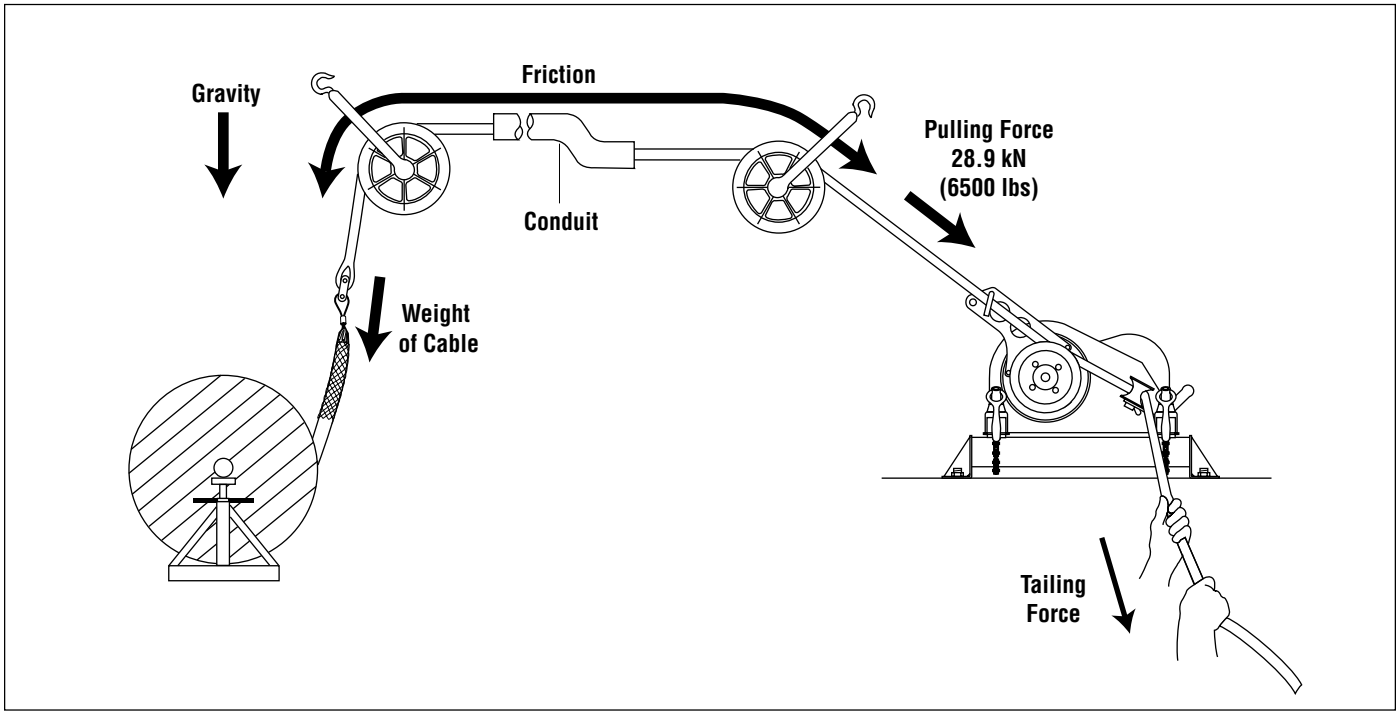

Cable Pulling Principles (cont'd)

Cable Pulling Forces

This section provides detailed explanations and illustrations of the forces that are generated during the cable pull. These explanations are based on the concepts presented in the previous section, Pulling Theory.

At the Cable Puller Anchoring System

The cable puller will exert its maximum pulling force on cable puller's anchoring system. It is extremely important the anchoring system can withstand this amount of force. See the instruction manual provided with your anchoring system for proper setup or installation.

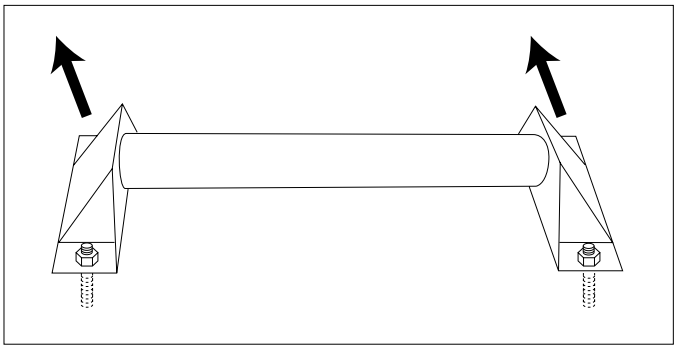

Pulling Force at the Cable Puller's Anchoring System

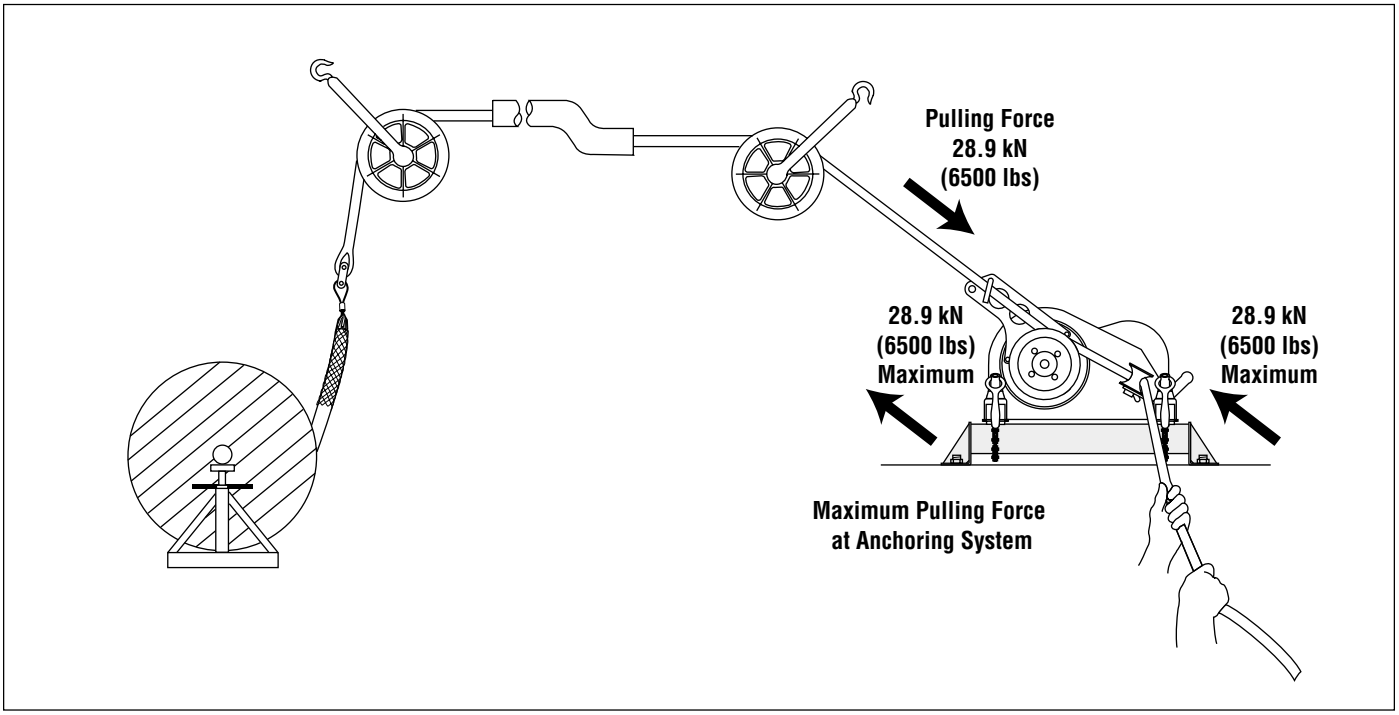

Cable Pulling Principles (cont'd)

Cable Pulling Forces (cont'd)

At the Capstan

The capstan acts as a *force multiplier.* The operator exerts a small amount of tension, or tailing force, on the rope; the capstan multiplies this force to pull the cable. The resultant force depends upon the number of times the rope is wrapped around the capstan, as shown in the formula below.

Pulling Force = Tailing Force x $e^{0.0175\mu ø}$

Where: e = the natural logarithm, or 2.7183

μ = the coefficient of friction between the rope and the capstan *

ø = the number of degrees of wrap of rope around the capstan

* The average value for the coefficient of friction when double braided composite rope is pulled over a clean dry capstan is 0.125.

The following table is based on the formula above. The input, or tailing force, is constant at 44.5 Newtons (10 lbs). Increasing the number of wraps increases the pulling force.

Operator's Tailing Force	Number of Wraps of Rope	Approximate Pulling Force
44.5 N (10 lbs)	1	93.4 N (21 lbs)
44.5 N (10 lbs)	2	213.5 N (48 lbs)
44.5 N (10 lbs)	3	474.9 N (106 lbs)
44.5 N (10 lbs)	4	1043.8 N (233 lbs)
44.5 N (10 lbs)	5	2293.7 N (512 lbs)
44.5 N (10 lbs)	6	5048.9 N (1127 lbs)
44.5 N (10 lbs)	7	11.1 kN (2478 lbs)

This table shows how the capstan acts as a force multiplier. Because the coefficient of friction depends upon the condition of the rope and capstan, this formula cannot determine an exact amount of pulling force.

The Capstan as a Force Multiplier

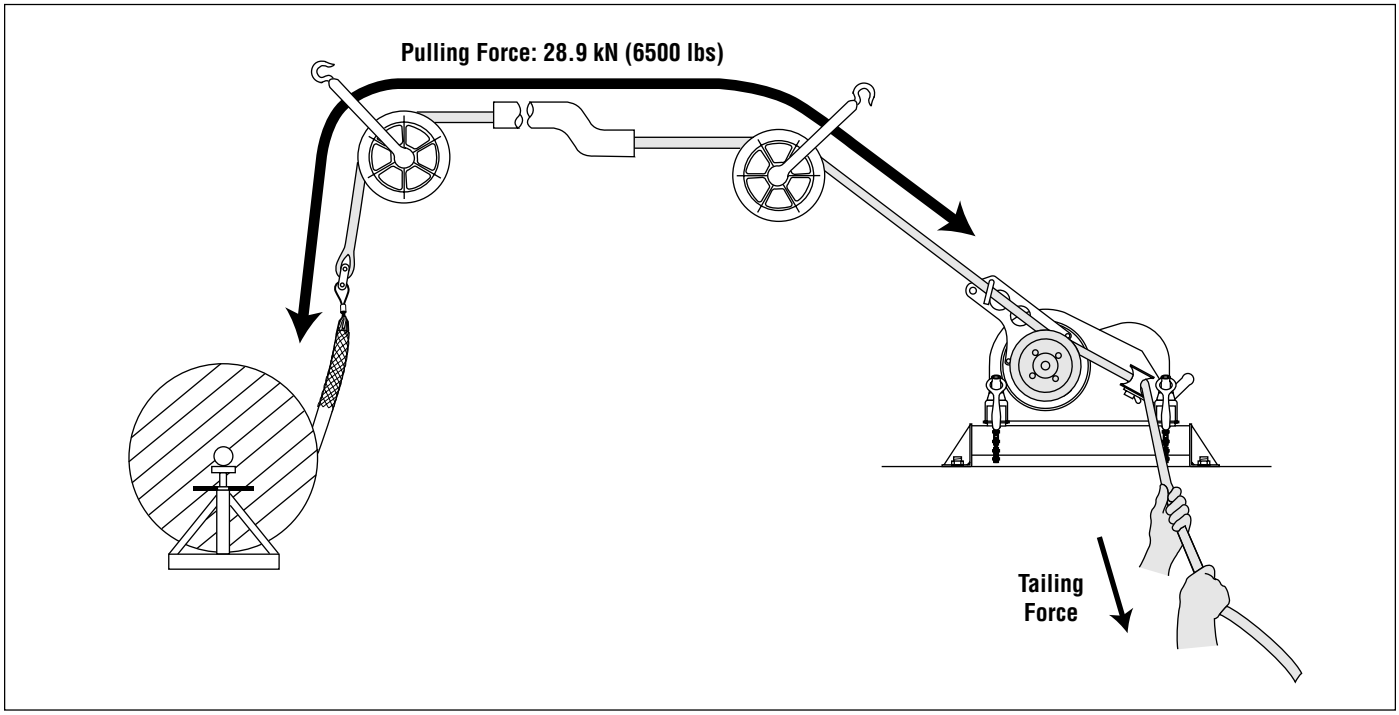

Cable Pulling Principles (cont'd)

Cable Pulling Forces (cont'd)

At the Pulling Rope

The product of a force (f) moving through a distance (d) is energy (f x d), and may be measured in Newton-meters or foot-pounds. Energy is stored in a rope when the rope is stretched. This is similar to the way energy is stored in a rubber band when it is stretched. Failure of the rope or any other component of the pulling system can cause a sudden uncontrolled release of the energy stored in the rope.

For example, a 100-meter nylon rope with a 50,000 Newton average breaking strength could stretch 40 meters and store 1,000,000 joules of energy. This is enough energy to throw a 900-kilogram object, such as a small automobile, 113 meters into the air.

A similar double-braided composite rope could store approximately 300,000 joules of energy. This could throw the same object only 34 meters into the air. The double-braided composite rope stores much less energy and has much less potential for injury if it were to break.

Double-braided composite rope is the only type of rope recommended for use with the Super Tugger® cable puller. Select a double-braided composite rope with an average rated breaking strength of at least 115.6 kN (26,000 lbs).

Stored Energy

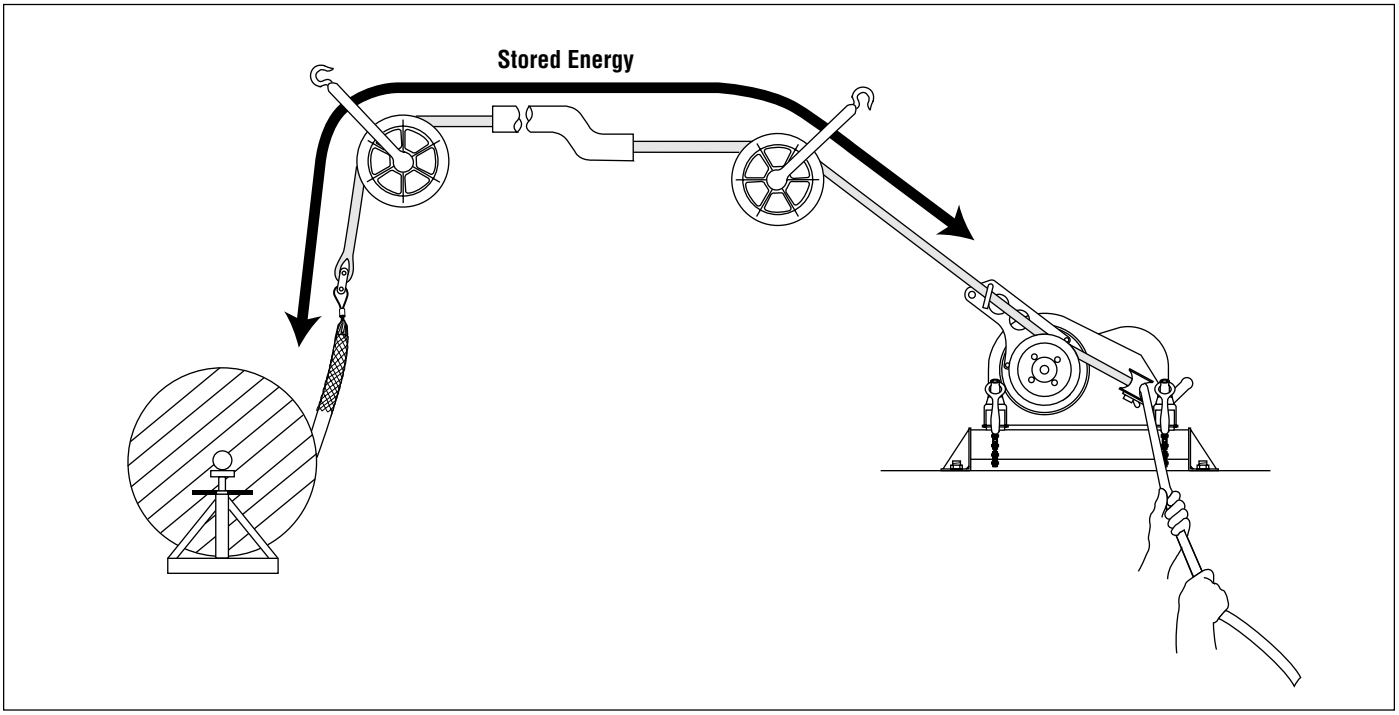

Cable Pulling Principles (cont'd)

Cable Pulling Forces (cont'd)

At the Connectors

The connectors will be subjected to the cable puller's maximum pulling force.

Several types of rope connectors—clevises, swivels, and rope-to-swivel connectors—are available. Follow the instructions provided with each to provide a good connection.

Two types of wire connectors—wire grips and pulling grips—are available. The wire grip uses a set screw to clamp onto the conductors of the cable. The pulling grip consists of a wire mesh basket that slides over the cable and grips the insulation.

A Typical Grip Setup—Clevis and Wire Grip

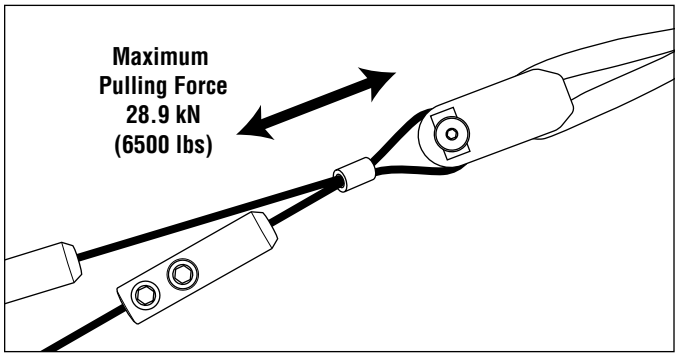

A Typical Grip Setup—Swivel and Pulling Grip

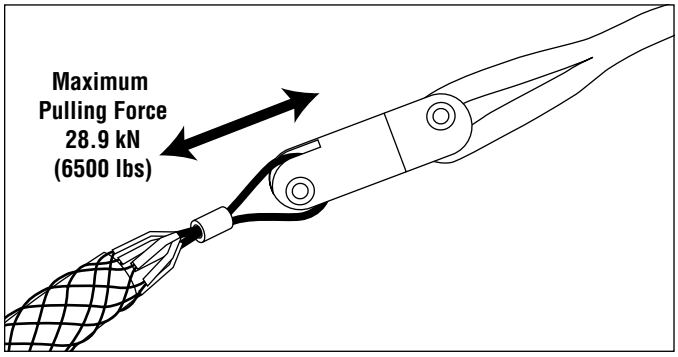

When selecting a pulling grip, it is extremely important to select a grip of the correct (1) type, (2) size, and (3) maximum rated capacity.

1. Select the correct type based on the descriptions of each type in the Greenlee catalog.
2. Measure the circumference of the wire bundle. (To do this accurately, fasten a tie strap around the bundle. Cut off and discard the tail. Then cut the tie strap and measure its length.) Use the table provided to find the correct size.
3. See the maximum rated capacities in the Greenlee catalog.

Pulling Grip Size Table

Circumference Range		Required Grip Diameter	
inches	mm	inches	mm
1.57 - 1.95	39.9 - 49.5	0.50 - 0.61	12.7 - 15.5
1.95 - 2.36	49.5 - 59.9	0.62 - 0.74	15.8 - 18.8
2.36 - 3.14	59.9 - 79.8	0.75 - 0.99	19.1 - 25.1
3.14 - 3.93	79.8 - 99.8	1.00 - 1.24	25.4 - 31.5
3.93 - 4.71	99.8 - 119.6	1.25 - 1.49	31.8 - 37.8
4.71 - 5.50	119.6 - 139.7	1.50 - 1.74	38.1 - 44.2
5.50 - 6.28	139.7 - 159.5	1.75 - 1.99	44.5 - 50.5
6.28 - 7.85	159.5 - 199.4	2.00 - 2.49	50.8 - 63.2
7.85 - 9.42	199.4 - 239.3	2.50 - 2.99	63.5 - 75.9
9.42 - 11.00	239.3 - 279.4	3.00 - 3.49	76.2 - 88.6
11.00 - 12.57	279.4 - 319.3	3.50 - 3.99	88.9 - 101.3
12.57 - 14.14	319.3 - 359.2	4.00 - 4.49	101.6 - 114.0
14.14 - 15.71	359.2 - 399.0	4.50 - 4.99	114.3 - 126.7

Cable Pulling Principles (cont'd)

Cable Pulling Forces (cont'd)

At the Sheaves

Sheaves are used to change the direction of the pull. A change in direction creates a new *resultant force* that is *greater than* the cable puller's maximum pulling force. This new resultant force exerts itself on the sheaves, sheave anchoring system, and support structures illustrated.

The resultant amount of force depends on the angle of the change in direction. A brief table is provided here; for more details, see IM 1363 (999 2998.8).

Resultant Force Table for the Super Tugger® (28.9 kN or 6500 Lbs Maximum Pulling Force)

Illustration	Angle of Change in Direction	R
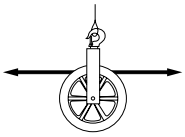	180°	0 (0)
	150°	15 (3380)
	135°	22.3 (5005)
	120°	28.9 (6500)
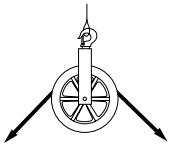	90°	40.8 (9165)
	60°	50.0 (11,245)
	45°	53.5 (12,025)
	30°	55.8 (12,545)
	0°	57.8 (13,000)

Typical Resultant Force at Sheave

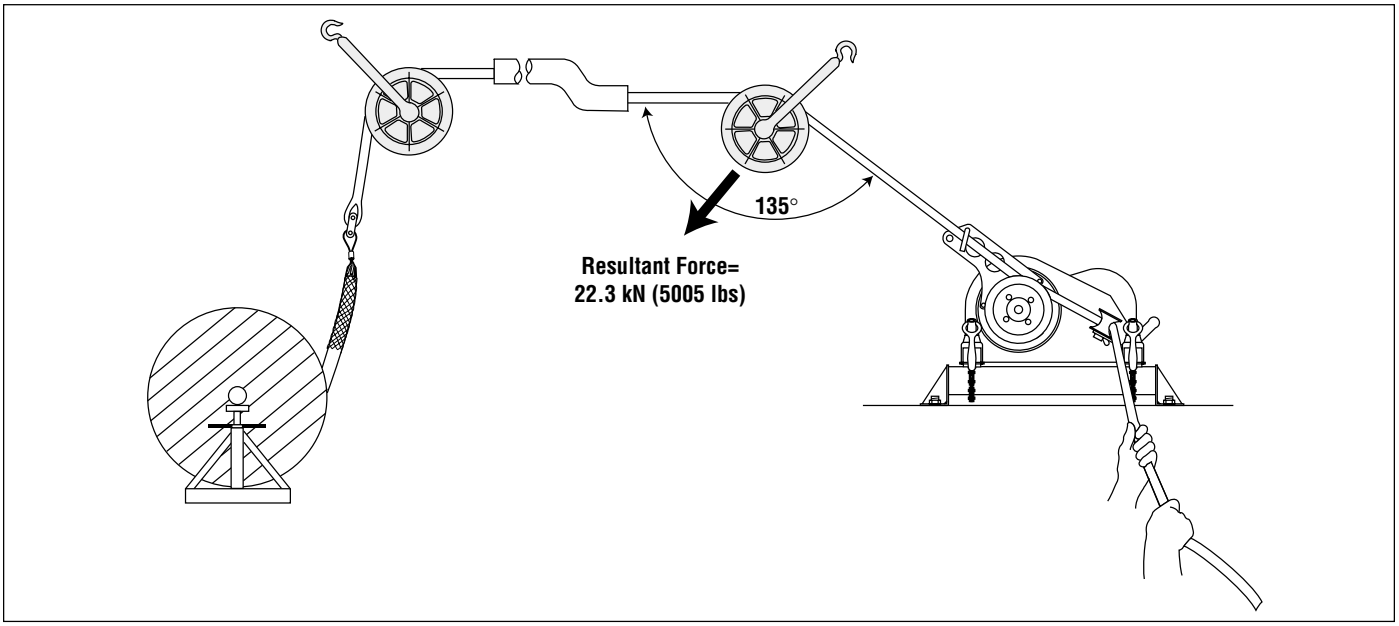

Cable Pulling Principles (cont'd)

Tailing the Rope

The rope must be pulled off of the capstan as the pull progresses. The rope that has left the capstan is the "tail". The process of pulling the rope off of the capstan is called *tailing the rope.*

The resistance of the cable varies throughout the duration of the cable pull. Changes in resistance are due to characteristics of the rope, changes in conduit direction, and changes in the amount of friction. The "feel" of the rope provides this information about the pull. This is called *tactile feedback*. Adjust the tailing force as necessary to compensate for these changes.

Control of the Pull

Decreasing the tailing force will decrease the pulling force, until the rope slips on the capstan and the pull stops. This provides a high level of control over the progress of the cable pull.

Do not allow the rope to slip on the capstan for more than a few moments. If it becomes necessary to completely stop a pull, shut off the puller and maintain enough tailing force to hold cable in place. Tie the rope off to hold it in place.

Amount of Tailing Force

While the rope and cable are under tension, it is important to maintain the proper amount of tailing force.

Too little tailing force will allow the rope to slip on the capstan. This will build up excessive heat and accelerate rope wear, increasing the possibility of breaking the rope.

The proper amount of tailing force will stop the rope from slipping on the capstan and produce a sufficient amount of pulling force to pull in the rope and cable.

Too much tailing force is any amount more than is necessary to stop the rope from slipping on the capstan. Excessive tailing force will not increase the pulling force or pulling speed.

Number of Wraps of Rope Around the Capstan

An experienced operator should choose the number of times the rope is wrapped around the capstan.

The proper number of wraps allows the operator to control the progress of the pull with a comfortable amount of effort.

Using *too few* wraps requires a large tailing force to accomplish the pull. Using too few wraps also makes the rope more likely to slip on the capstan. This builds up heat and accelerates rope wear.

Using *too many* wraps causes the rope to grab the capstan more tightly. This accelerates rope wear, wastes power, and increases the possibility of a rope overlap. Using too many wraps also reduces tactile feedback, so you receive less information about the pull. You cannot quickly relax the tailing force when there are too many wraps.

If the rope becomes difficult to tail, add another wrap of rope. Turn off the puller and release all of the tension in the rope. Add a wrap and resume pulling. Be aware, however, that some pulls will require tension to hold the cables in place. In these cases, do not attempt to release all of the tension and add a wrap of rope. You will need to anticipate the number of wraps before starting the pull.

Preventing Rope Overlap

Do not allow the rope to become overlapped on the capstan during a pull.

A rope overlap will make it impossible to continue or back out of the pull.

If the rope becomes overlapped, you will lose control of the pull—the rope will advance with no tailing force and will not feed off of the capstan. The capstan will not allow you to reverse the direction of the rope, so you cannot back out of an overlap.

Set up the puller properly. The positioning peg, entrapment peg, rope ramp and tapered capstan are intended to prevent rope overlap. See the instructions in the Operation section of this manual.

Every wrap of the rope must remain in direct contact with the capstan. During the pull, take great care to prevent the incoming rope from riding up and overlapping the next wrap. If an overlap begins to develop, immediately relax the tailing force on the rope so that the rope can feed back toward the conduit or tray. When the rope resumes its normal path, apply tailing force and continue the pull.

There is no suggested remedy for a rope overlap.
Do not allow the rope to overlap!

Cable Pulling Principles (cont'd)

Summary of Cable Pulling Principles

- A cable pulling system consists of many components that work together to accomplish a pull.
- The cable puller is rated by its maximum pulling force; every other component is rated by its maximum rated capacity. The maximum rated capacity of every component must meet or exceed the maximum pulling force of the cable puller.
- The cable puller must overcome two types of resistance: gravity and friction. The puller's capstan, the pulling rope, and the operator tailing the rope work together to produce pulling force.
- The cable puller exerts force on every component of the cable pulling system, including the anchoring systems and the support structures.
- Energy is stored in a rope when the load causes the rope to stretch. Failure of the rope or any other component can cause a sudden release of energy. Replace any rope that is worn or damaged.
- Carefully select the number or wraps of rope around the capstan before starting the pull.
- Control the pull by tailing the rope. Be familiar with the interaction of the rope and capstan.
- Do not allow a rope overlap to develop.

Planning The Pull

- Pull in a direction that will require the lowest amount of pulling force.
- Plan several shorter pulls rather than fewer longer pulls.
- Locate the puller as close to the end of the conduit as possible to minimize the amount of exposed rope under tension.
- Place each component so that the pulling forces are used effectively.
- Select an anchoring system: adapter sheaves, which are preferred, or the floor mount.
- Verify that each component has the proper load rating.
- Inspect the structural supports. Verify that they have enough strength to withstand the maximum forces that may be generated.

Typical Setups

Setups are shown without force gauge. Place the force gauge so the operator has an unobstructed view of the meter and quick access to its ON/OFF switch.

Using An Adapter Sheave To Pull Through Exposed Conduit

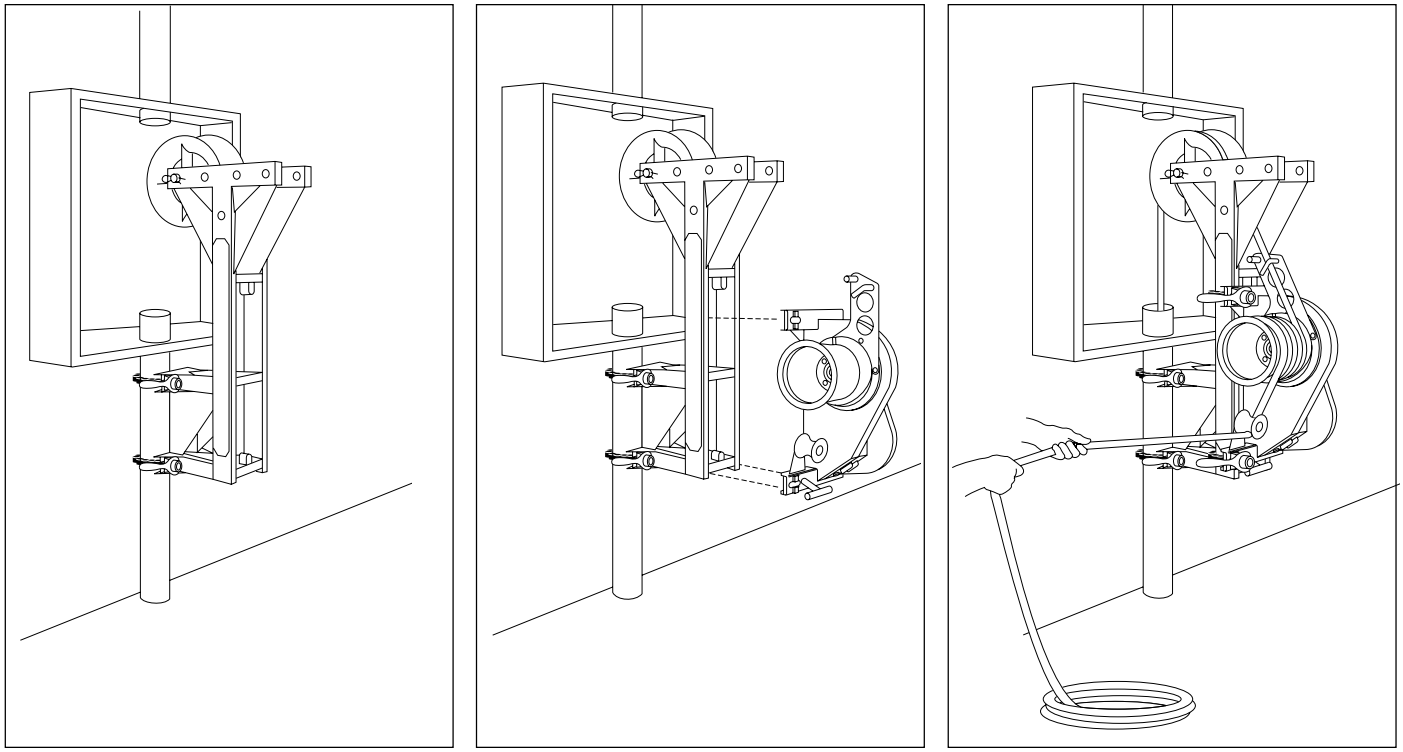

Using an Extension Bushing, Flexible Pipe Adapter, Adapter Sheave, and T-Boom to Pull Through Concealed Conduit

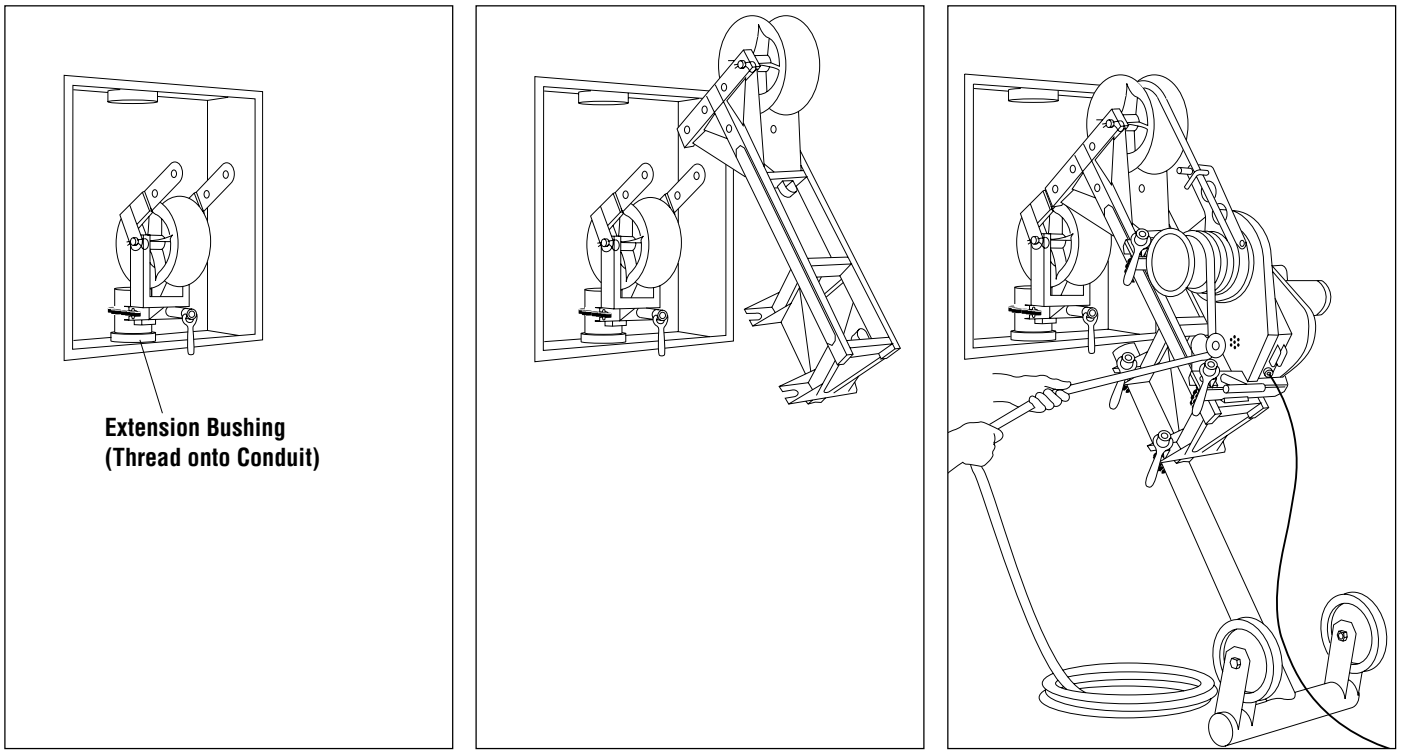

Typical Setups (cont'd)

Setups are shown without force gauge. Place the force gauge so the operator has an unobstructed view of the meter and quick access to its ON/OFF switch.

Using A Flexible Pipe Adapter, Adapter Sheave and T-Boom For Overhead Pulls

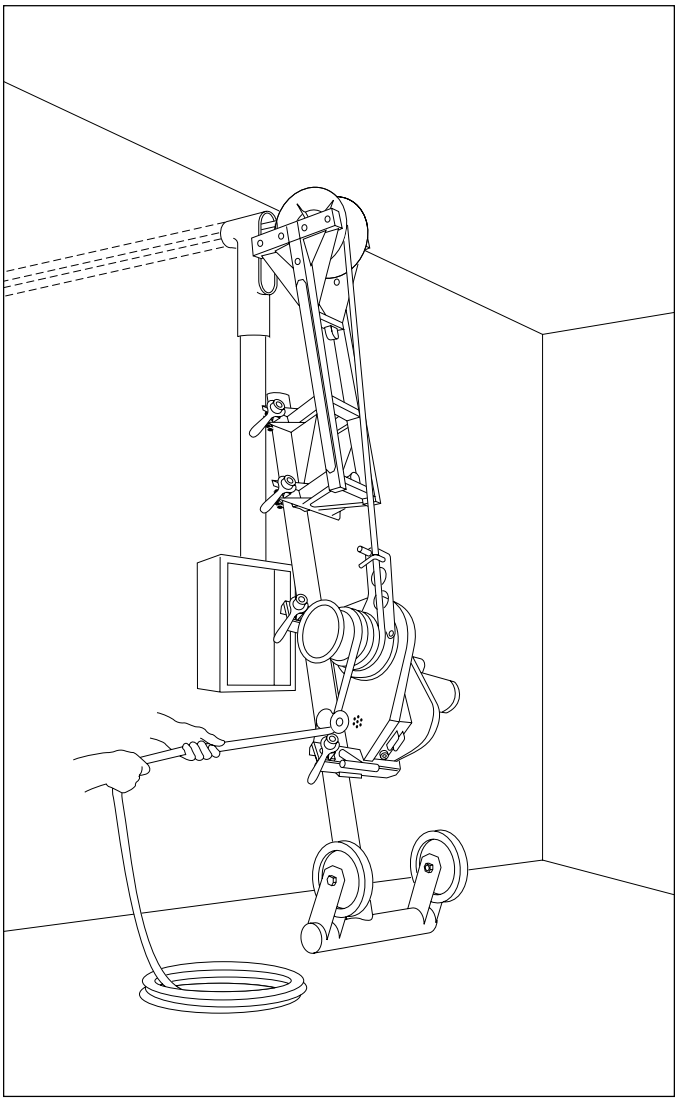

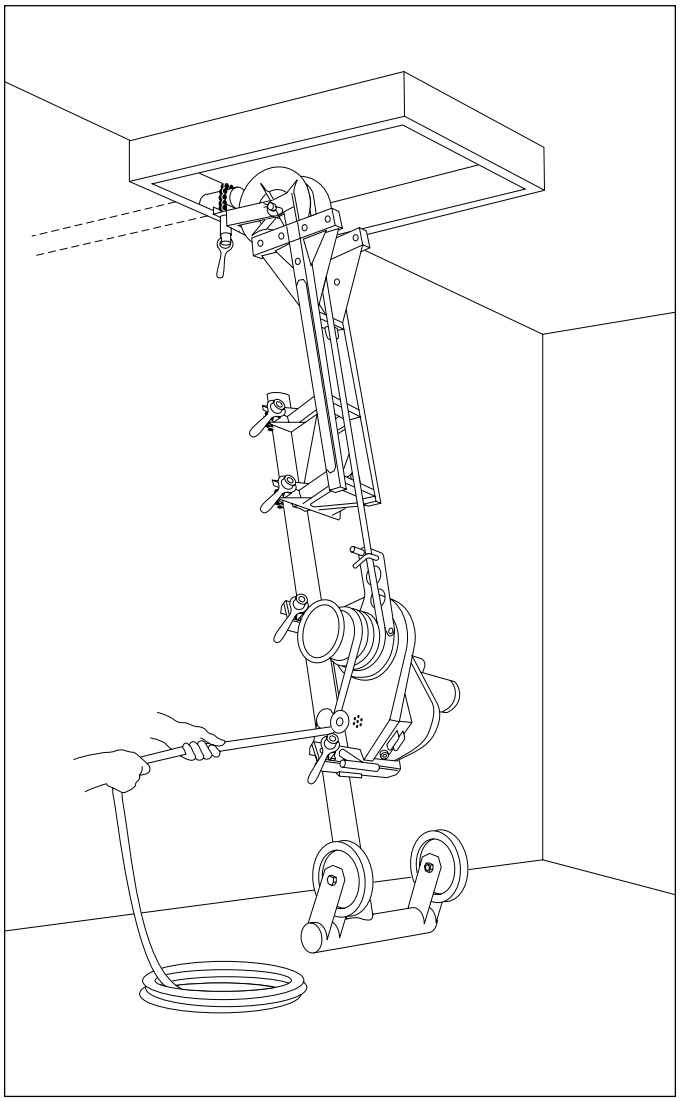

Typical Setups (cont'd)

Setups are shown without force gauge. Place the force gauge so the operator has an unobstructed view of the meter and quick access to its ON/OFF switch.

Using a Manhole Sheave

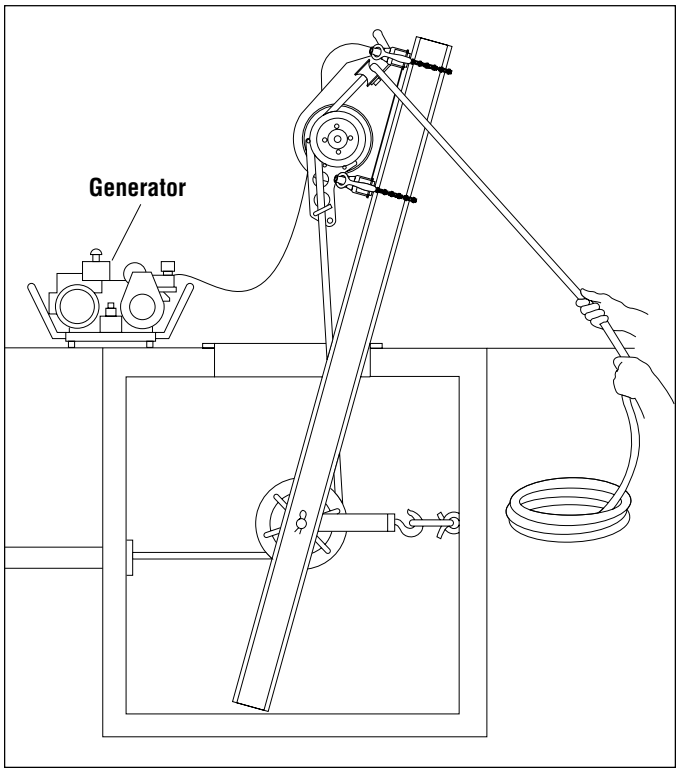

Using Feeding Sheaves in Manholes

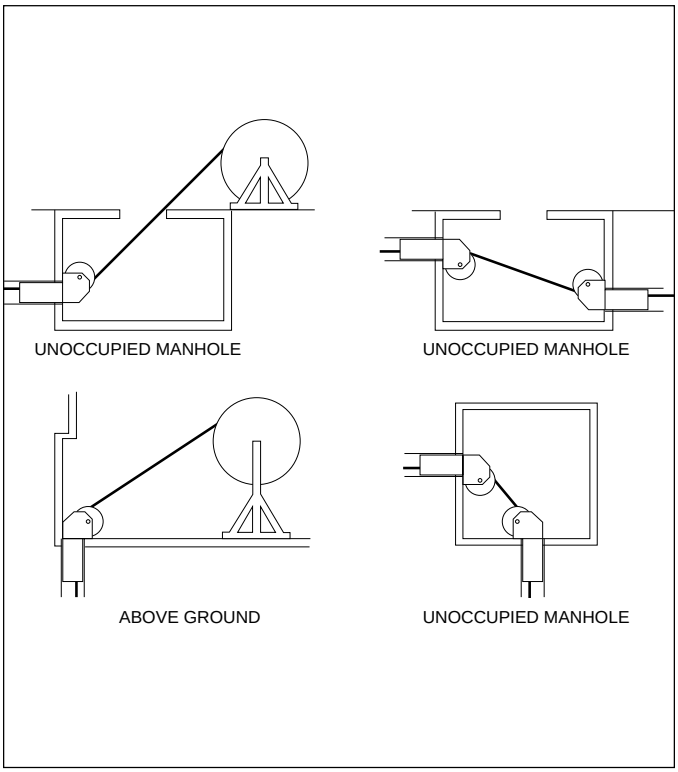

Using a Floor Mount

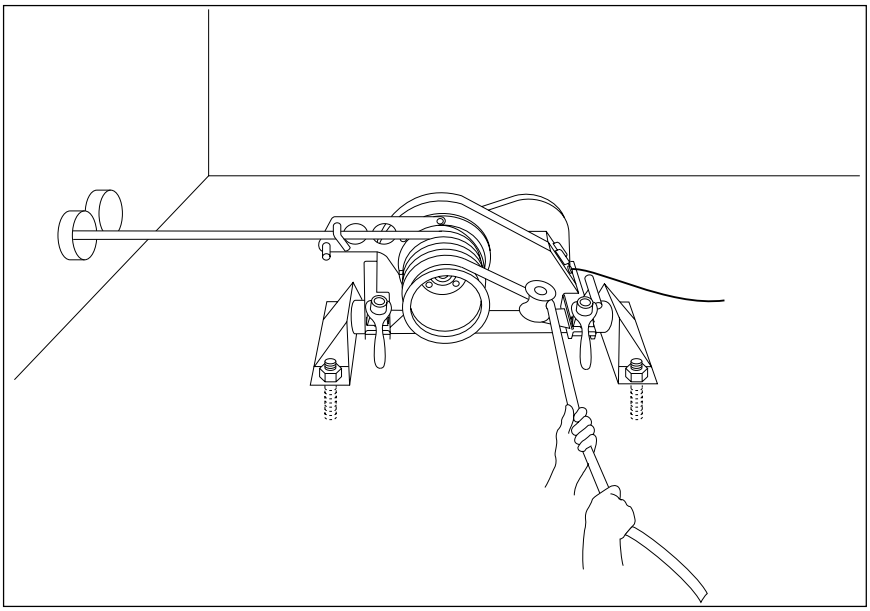

Setup and Operation

While reading through this section of the manual, look for components that are shaded in the illustrations. The shading indicates components that are associated with the accompanying text.

1. Fish the rope through the conduit.
2. Set up the cable puller mounting. Set it up so that the rope will approach the capstan at an angle of 90° (±5°) as illustrated in Rope Approaching the Capstan.

   Note: If using an adapter sheave, flexible pipe adapter, or mobile T-boom, see the illustrations in this manual. If using a manhole sheave or floor mount, see the instructions supplied with those items.

Rope Approaching the Capstan

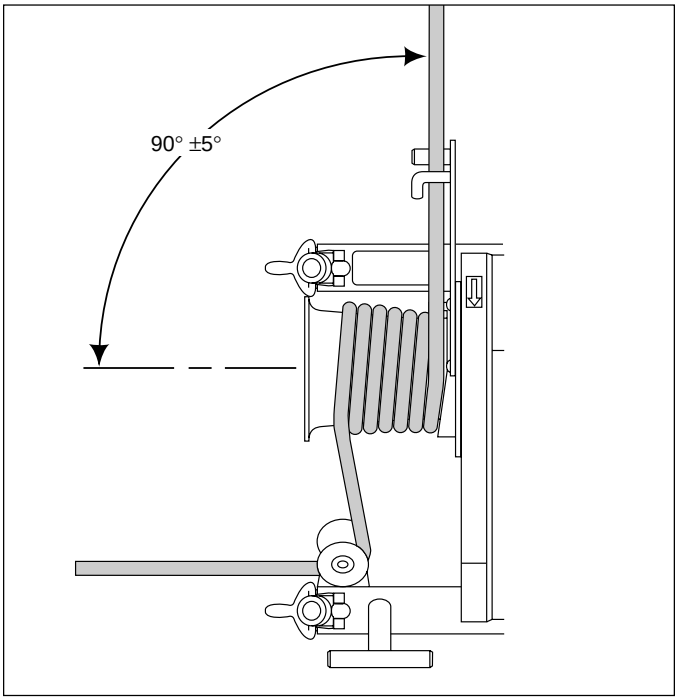

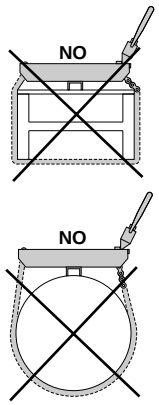

⚠WARNING

When setting up the flexible pipe adapter or puller, do not use the vise chains on a structural support that is less than 51 mm (2") or more than 254 mm (10") wide. An oversized or undersized structural support can allow the puller to slide or break loose and strike nearby personnel with sufficient force to cause severe injury or death.

⚠WARNING

Install the vise chains properly.

- Follow the vise chain tightening instructions carefully. Improperly tightened chains can allow the puller to slide or break loose and strike nearby personnel.
- Do not allow the vise chains to bind at the corners when mounting the puller to a square or rectangular support. The vise chain must be uniformly tight at all points.

Failure to observe this warning can result in severe injury or death.

3. Install the vise chains as shown.

Vise Chain Installation

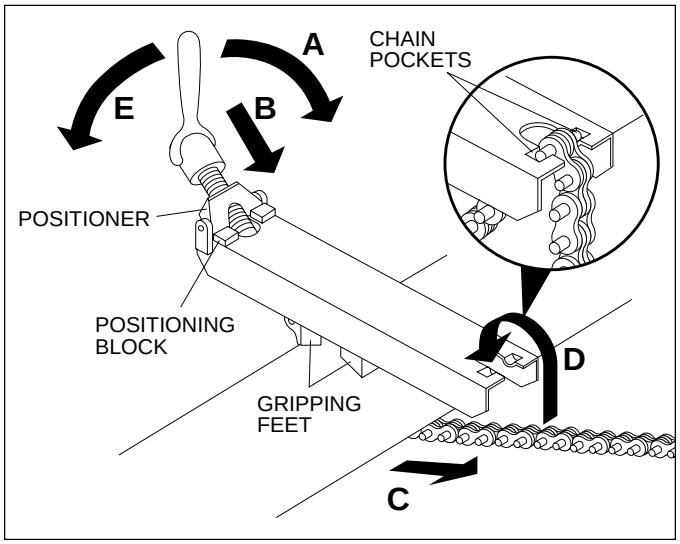

   a. Rotate the vise chain handle to expose most of the threads. Leave only three or four threads engaged in the handle.
   b. Thread the chain though the hole in the frame. Set the positioner against the positioning blocks.
   c. Wrap the chain around the conduit, pipe sheave adapter, or structural element.
   d. Pull the vise chain tight and insert the chain pins into the chain pockets, or recesses.
   e. Turn the handle to slightly tighten the chain.
   f. Repeat Steps A - E for the other chain.

4. Rotate the vise chain handles, by hand, clockwise to fully tighten the chain. Do not use tools, extensions or “cheaters”.

Setup and Operation (cont'd)

5. Align the rope ramp and route the rope as illustrated in Rope Path, Top View and Rope Path, Side View.

Note: Use every component of the rope path—the positioning peg, entrapment peg, rope ramp and tapered capstan—as shown to help prevent rope overlap.

Rope Path, Top View

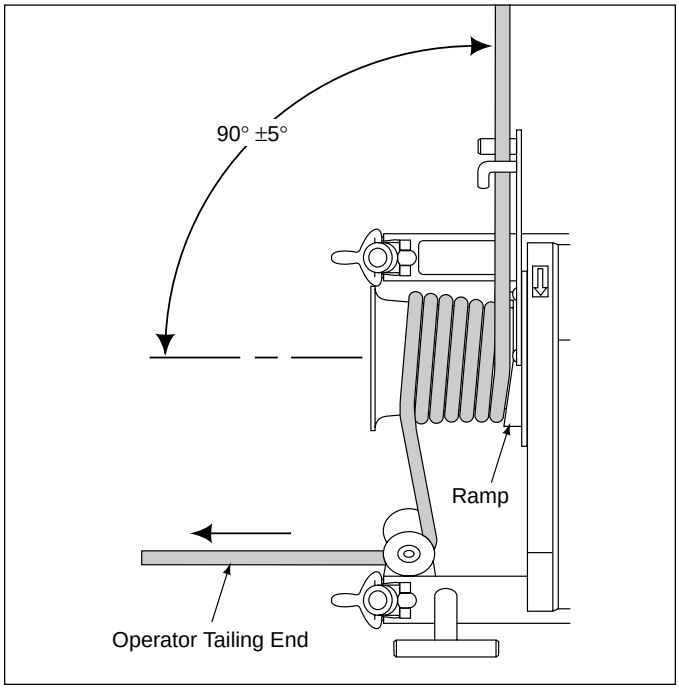

Rope Path, Side View

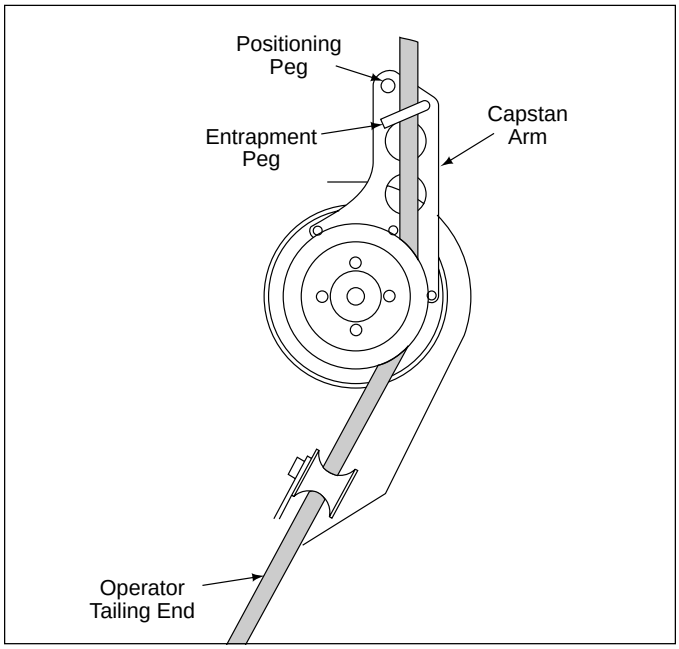

6. Check the ON/OFF switch on the puller to be sure it is OFF. Plug the puller into the receptacle of the standard force gauge. Plug the force gauge into an appropriate power supply (see Grounding Instructions in this manual).

   Note: If using an extension cord, it must be rated for 20 amps. Use the shortest cord possible. Longer cords reduce puller speed.

7. Position the force gauge so that it can be monitored by the puller operator.

Duty Cycle Table

Color Band on Meter	Pounds of Pulling Force	Alarm	Duty Cycle (in minutes)
Green	0-5000	off	continuous
Yellow	5000 - 5500	on	15 on / 15 off
Yellow	5500 - 6500	on	5 on / 15 off
Red	over 6500	on	puller will stop

8. Grasp the tailing end of the rope. Apply a slight amount of tailing force.
9. Turn the puller ON.
10. Tail the rope, allowing the spent rope to accumulate on the floor between the operator and the puller.

    Note: The capstan arm is intended to pivot. Do not attempt to stop the arm from pivoting.

11. When the pull is complete, turn the puller OFF. Tie off the rope to the T-shaped cleat and anchor the cable.

Removing Cable

Removing old cable involves the same principles as installing new cable. However, there are some important differences.

Pulling Force

It is difficult to predict the amount of pulling force necessary to remove an old cable. The cable may be damaged, and it may break with an unexpectedly low pulling force.

The required pulling forces may be very high:

- The cable has probably “taken a set”. Unlike the new cable on a reel, cable in conduit has probably been in the conduit for years, or perhaps decades. The cable will resist bending and straightening as it is pulled through the conduit.
- The pulling lubricant has probably hardened, increasing pulling resistance.
- The insulation may be damaged and the cable may be corroded.
- Dirt or other foreign matter may have entered the conduit and may have cemented the cable in place.

Using a Force Gauge

When pulling old cable out of a conduit, the pulling force will be highest when *starting* the pull. Select a cable puller and pulling components to meet or exceed the estimated amount of pulling force necessary to remove the old cable. Because breaking the cable free will require the largest amount of pulling force, it is necessary to use a force gauge to prevent overloading the system components. For the 120-volt Super Tugger®, use the 37179 Force Gauge. For the 220-volt Super Tugger®, use the 35638 Force Gauge.

Carefully monitor the pulling force at the force gauge; if the puller is not able to begin the pull, shut off the puller and disassemble the setup. Start over with a puller and components of a higher force rating.

Puller Placement

Pulling out old cable is generally accomplished with the puller located some distance away from the end of the conduit. This allows the pulling crew to pull out a long section of cable before turning off the puller, cutting off the cable, and reattaching the grip(s). Mounting the cable puller a distance away from the end of the conduit increases the amount of exposed rope, which greatly increases the amount of violent whipping action which would occur if the rope or other components were to break.

To isolate the operator from the rope path:

- Locate the puller so that you will stand behind an obstruction, such as a wall. Set up the puller so that you will be able to maintain control of the pull. You need a clear view of the rope as it feeds onto the capstan, including several feet of the rope in front of the capstan. You must be able to turn off the puller before the pulling grip, connector, or swivel contacts the capstan.
- Use an additional pulling sheave to change the direction of the tailing rope. Anchor the sheave so that you are close enough to maintain control of the pull. You need a clear view of the rope as it feeds onto the capstan, including several feet of the rope in front of the capstan. You must be able to turn off the puller before the pulling grip, connector, or swivel contacts the capstan.

  Note: Use the additional pulling sheave to change the direction of the tailing rope (after the rope leaves the capstan). Do not change the direction of the pulling rope.
- Use a longer tailing rope than usual and stand away from the puller. Stand as far from the puller as possible, while maintaining control of the pull. You need a clear view of the rope as it feeds onto the capstan, including several feet of the rope in front of the capstan. You must be able to turn off the puller before the pulling grip, connector, or swivel contacts the capstan.

Dual Pulling

When the estimated amount of pulling resistance exceeds the ability of the puller, two pullers may be used to accomplish the pull. Connect the two pullers to the cables in parallel—use two sets of ropes, grips, and other accessories to avoid overloading any component of the pulling system.

Dual Pulling

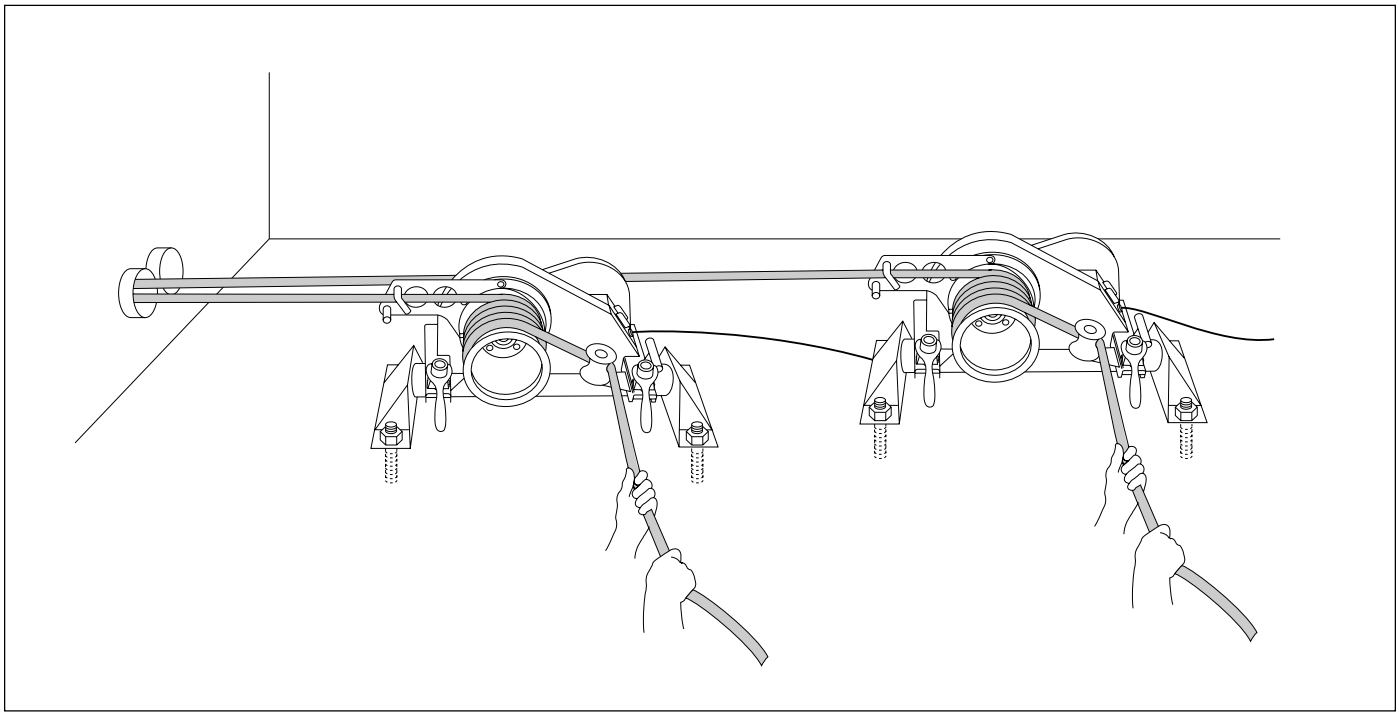

Maintenance

Read all instructions thoroughly. Be sure that you understand all of the instructions and have the necessary tools available before dismantling the puller.

Service Activity	Schedule
Lubricate the drive chains.	every 20 hours
Grease the drive chain shafts.	every 20 hours
Inspect the chains and ratchet pawl.	every 40 hours
Inspect the commutator brushes.	every 40 hours

⚠WARNING

Electric shock hazard:

Disconnect the cable puller from the power supply before servicing.

Failure to observe this warning can result in severe injury or death.

Lubricating the Drive Chains (every 20 hours)

1. Remove the right outer guard (69) and left outer guard (4).
2. Lubricate the inside of the chains with 80W-90W gear oil.
3. Replace the guards and screws.

Greasing the Drivetrain Shafts (every 20 hours)

Apply a multipurpose NLGI Grade 2 grease (such as Mobil HP or Amoco Permalub) at the grease fittings (5 and 37). These fittings are located inside the capstan housing and under the countershaft (31).

Maintenance (cont'd)

Inspecting the Chains and Ratchet Pawl (every 40 hours)

1. Remove the right outer guard (69), left outer guard (4), and right guard (61).
2. Remove the connecting link (72) and #40 chain (71).
3. Remove the capstan retaining screws (2). Remove the lubricating screw (5) and washers (6-9). Remove capstan unit (10-19). Remove connecting link (21) and #60 chain (20).
4. Clean the chains thoroughly with solvent.
5. Lay the chains against a straightedge. Slide on end of the chain back and forth to check free play. See illustration below. If free play is more than 3/8", replace the chain. Replace the chain if any links bind.

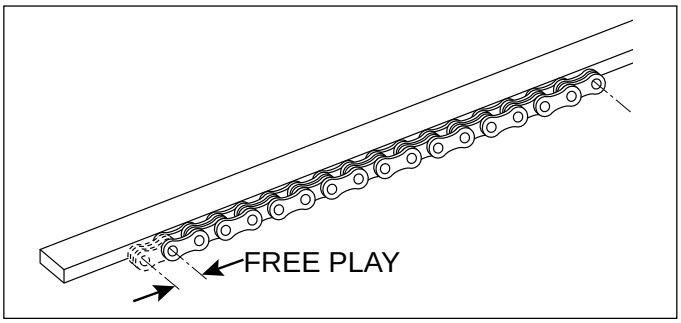

6. Lubricate the chains with 80W-90W gear oil.
7. Remove the ratchet pawl (43) and compression spring (44). Apply multipurpose NLGI Grade 2 grease (such a Mobilgrease® HP or Amoco Permalub) to all working surfaces. Replace the spring and pawl.
8. Assemble the #40 chain (70).

   Note: Install the clip of each connecting link so that the closed end of the clip faces the direction of chain travel, as shown in the Exploded View.

9. Loosen, but do not remove, the four nuts (41) that secure the motor. Push the motor away from the #40 sprocket (70) to put tension on the chain. Tighten the nuts (41) to 8 foot-pounds (10.8 Newton-meters).
10. Assemble in reverse order.
11. Plug the puller in and turn the puller ON. Listen for the clicking noise of the anti-reversing mechanism (ratchet pawl and compression spring). If you do not hear this clicking noise, inspect and repair the puller.

⚠WARNING

Do not operate puller if the anti-reverse mechanism is not working.

Failure to observe this warning can result in severe injury or death.

Inspecting the Commutator Brushes (every 40 hours)

1. Remove two brush caps (121). Remove two brushes (116).
2. Measure the brushes. Replace both brushes if either brush is less than 3/8" long.

Maintenance (cont'd)

Replacing the Frame

⚠WARNING

Electric shock hazard:

Disconnect the cable puller from the power supply before servicing.

Failure to observe this warning can result in severe injury or death.

Replace the frame if appears damaged. During disassembly, inspect each part. Replace any worn, damaged, or missing parts with Greenlee replacement parts. Replace the needle bearings (74 and 75) regardless of their appearance.

1. Remove the left outer guard (4). Remove the lubricating screw (5), washers (6-9), and capstan unit (10-19).
2. Remove the #60 chain (20). Remove the sprocket (22), washers (23), and guard (25).
3. Remove the right outer guard (69). Remove the #40 chain.
4. Remove the retaining ring (67), #60 sprocket (31), and all items located on the sprocket (32-37 and 68-75). Discard the needle bearings (74 and 75).
5. Remove cap screw (45) and all items of the eccentric assembly (46-49).
6. Remove the cap screw (26) and all items of the idler assembly (27-30).
7. Remove the switch housing (54) and components.
8. Remove the motor, handle, sheave, ratchet pawl and feet.
9. Assemble items to the new frame in reverse order.

Notes: Replace any components that show signs of wear or damage.

When replacing the items of the sprocket (31) assembly, install new needle bearings (74 and 75).

Install the clip of each connecting link so that the closed end of the clip faces the direction of chain travel, as shown in the Exploded View.

Troubleshooting the Electrical Circuit

⚠WARNING

Electric shock hazard:

Disconnect the cable puller from the power supply before servicing.

Failure to observe this warning can result in severe injury or death.

See the wiring diagram. Use a continuity checker to check the electrical circuit. Lack of continuity in the following procedure indicates that a repair is necessary.

1. Unplug the puller.
2. Set the switches to ON.
3. Place the probes of the continuity checker across the following terminals of the cable puller and force gauge. All of these pairs of terminals should have continuity.

To check the switches:

A and B
Q and R
S and T (220-volt models only)
X and Y (220-volt models only)

To check the connectors:

G and A
H and D
I and J

K and S
L and O
M and N

U and N
V and R
W and K (120-volt models only)
W and T (220-volt models only)

To check the bridge rectifier:

C and D
E and F

To check the ammeter:

O and P

To check the motor:

C and E

If the motor fails this check, inspect the motor components (brushes, armature, and wires). Replace any parts that are worn or damaged. Replace both brushes if either brush measures less than 3/8" long.

Troubleshooting

Should the puller become inoperative, refer to the troubleshooting table below. While performing any repairs, inspect the motor, capstan, and drivetrain.

PROBLEM	PROBABLE CAUSE	PROBABLE REMEDY
Motor will not run.	No power at supply circuit.	Check power supply with a voltmeter. See the Specifications section of this manual.
	Faulty switch or wiring.	Check the switch and wiring for continuity.
	Motor faulty.	Check the motor and wiring for continuity. Check condition of brushes. Replace any worn or damaged items.
		Replace motor
Capstan does not rotate while motor is running.	#60 chain broken.	Replace #60 chain.
	#40 chain broken.	Replace #40 chain.
	Broken sprocket in gearbox or stripped shaft in motor.	Disassemble puller. See disassembly instructions under Inspecting the Chains and Ratchet Pawl. Replace any worn or damaged drive components.

Exploded View

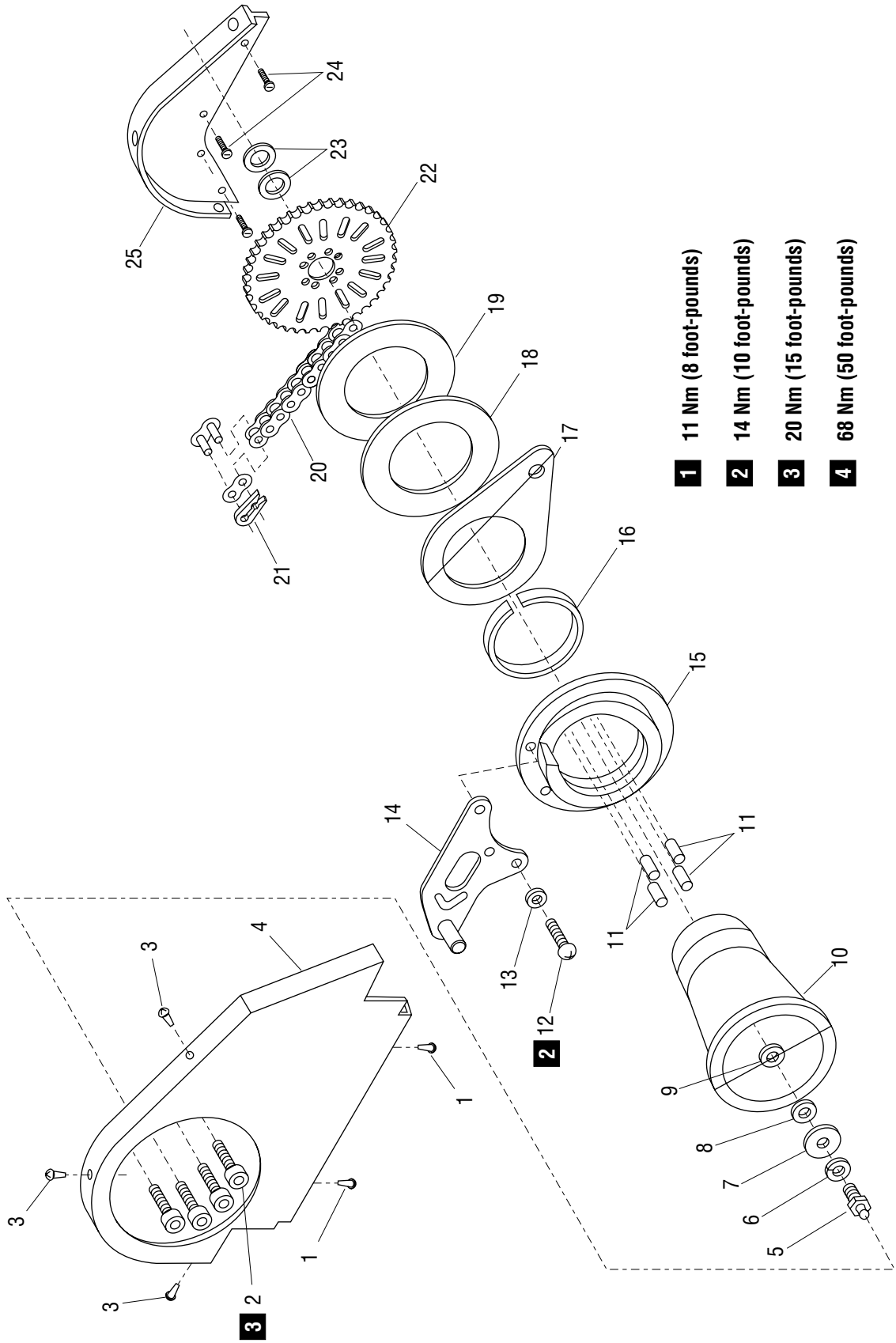

Exploded View (cont'd)

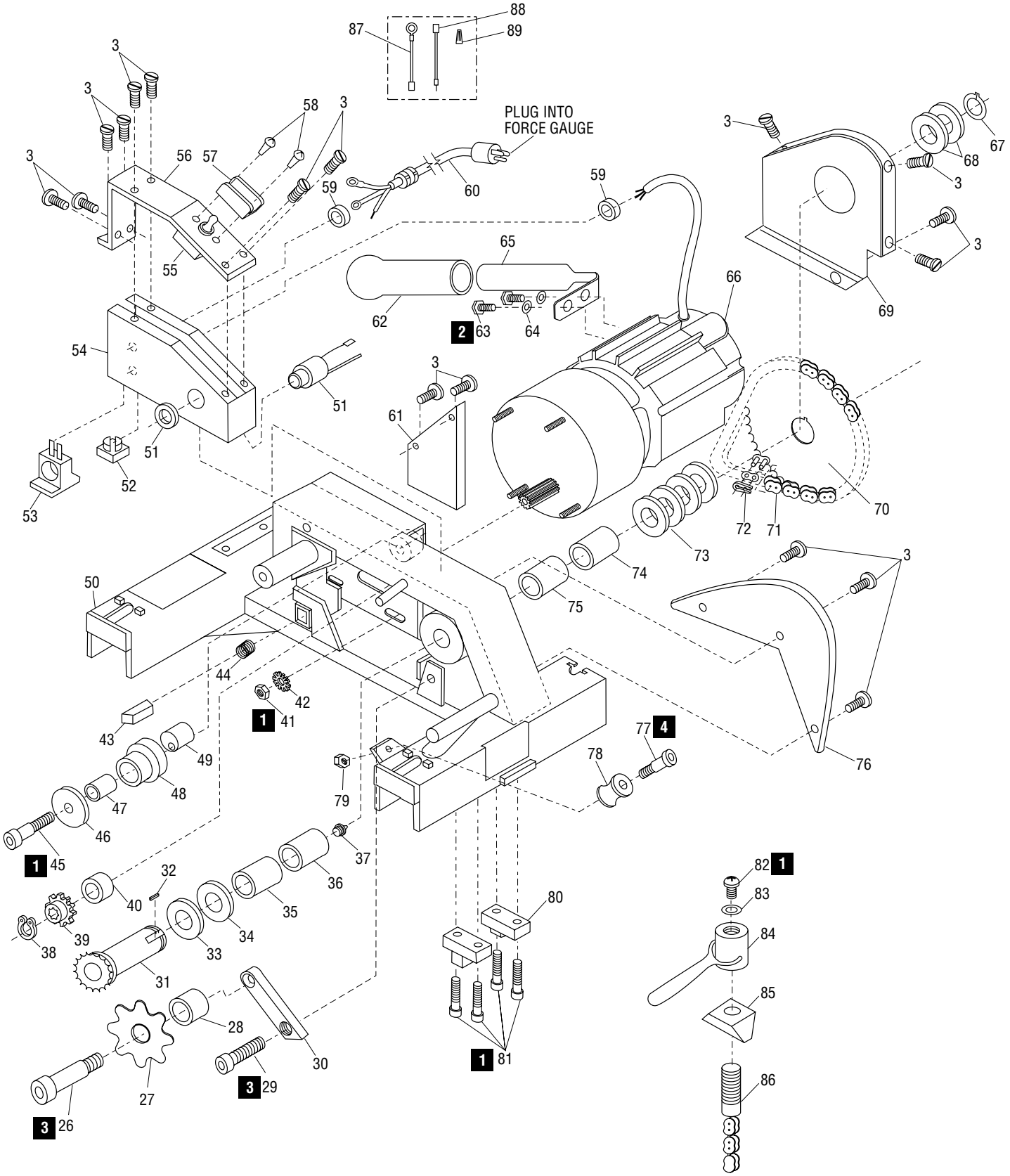

Parts List

KEY	UPC NO.	PART NO.	DESCRIPTION	QTY.
1	51655	905 1655.9	Screw, thread-forming, #10–16 x .500 hex washer head	2
2	53922	905 3922.2	Screw, cap, 3/8–16 x 2.75 socket head	4
3	53194	905 3194.9	Screw, self-tapping, #10–16 x .250, Phillips head	20
4	30103	503 0103.9	Guard, left outer	1
5	25521	502 5521.5	Screw unit, lubricating	1
6	51603	905 1603.6	Washer, lock, .643 x 1.08 x .156 spring	1
7	29938	502 9938.7	Washer, flat, .687 x 2.00 x .125	1
8	52644	905 2644.9	Washer, flat, .625 x 1.00 x .031 qty. determined at final assembly	
9	52645	905 2645.7	Washer, flat, .625 x 1.00 x .062 qty. determined at final assembly	
10	35542	503 5542.2	Capstan unit	1
11	50134	905 0134.9	Pin, dowel, .375 x 2.00	4
12	52587	905 2587.6	Screw, cap, 5/16–18 x .875, socket button head	3
13	51602	905 1602.8	Washer, 5/16 lock	3
14	35305	503 5305.5	Arm, capstan	1
15	35291	503 5291.1	Ramp	1
16	35322	503 5322.5	Bearing, ramp	1
17	35318	503 5318.7	Plate, anti-rotation	1
18	35310	503 5310.1	Washer, flat, 4.80 x 8.00 x .060, plastic	1
19	35320	503 5320.9	Washer, flat, 4.80 x 8.00 x .060, steel	1
20	30095	503 0095.4	Chain, roller, #60	1
21	54251	905 4251.7	Connecting link for #60 Chain	1
22	35361	503 5361.6	Sprocket, #60, 40 teeth	1
23	29683	502 9683.3	Washer, flat, 1.39 x 2.00 x .125 fiber	4
24	51460	905 1460.2	Screw, self-tapping, #10–32 x .375 Phillips head (120-volt model)	8
	51460	905 1460.2	Screw, self-tapping, #10–32 x .375 Phillips head (220-volt model)	7
25	29675	502 9675.2	Guard, left inner	1
26	53319	905 3319.4	Screw, shoulder, .500 x .625 x 3/8–16	1
27	53222	905 3222.8	Sprocket, #60, 8 teeth	1
28	53320	905 3320.8	Bearing, bronze, .504 x .627 x .500	1
29	50595	905 0595.6	Screw, cap, 3/8–16 x .625 socket head	1
30	31251	503 1251.0	Bracket, Idler	1
31*	30098	503 0098.9	Sprocket, #60, 8 teeth	1
32	30125	503 0125.0	Key, 1/4" square	1
33*	29669	502 9669.8	Washer, thrust, 1.12 x 2.00 x .062	1
34	29684	502 9684.1	Washer, flat, 1.39 x 2.00 x .031 fiber	1
35*	53197	905 3197.3	Inner race (Torrington #IR-182220)	1
36*	53196	905 3196.5	Inner race (Torrington #IR-182216)	1
37*	51271	905 1271.5	Grease fitting, Amelite #1743-B	1

Parts List (cont'd)

KEY	UPC NO.	PART NO.	DESCRIPTION	QTY.
38	53216	905 3216.3	Retaining ring, .625, Truarc #5100-62	1
39	30116	503 0116.0	Sprocket, #40, 8 teeth	1
40	31669	503 1669.9	Spacer, .652 x .750 x .562	1
41	51705	905 1705.9	Nut, hex, 1/4–28 UNF	4
42	53240	905 3240.6	Washer, lock, .261 x .750 x .035	4
43	30102	503 0102.0	Ratchet Pawl	1
44	16309	501 6309.4	Spring, compression, .210 x 3.00 x 1.62	1
45	53236	905 3236.8	Screw, cap, #10–24 x .875 socket head	1
46	53341	905 3341.0	Washer, flat, .194 x 1.08 x .062	1
47	53238	905 3238.4	Bearing, bronze, .690 x .878 x .500	1
48	30123	503 0123.3	Idler, chain	1
49	30121	503 0121.7	Adjuster, chain, eccentric	1
50	30119	503 0119.5	Frame Unit	1
51	35431	503 5431.0	Horn unit (120-volt model)	1
	35633	503 5633.0	Horn unit (220-volt model)	1
52	85997	918 5997.2	Bridge rectifier, 600 volts, 35 amps, single phase	1
	53361	905 3361.5	Screw, self-tapping, #8–32 x .750 (secures bridge rectifier)	1
53	35430	503 5430.2	Current transformer assembly (120-volt model)	1
	01948	500 1948.1	Current transformer assembly (220-volt model)	1
	53936	905 3936.2	Screw, self-tapping, #8–18 x .375 (secures current transformer)	1
54	35469	503 5469.8	Housing, switch	1
	50750	905 0750.9	Washer, lock, .200 x .373 x .023 (for ground screw in switch housing)	1
55	86388	918 6388.0	Circuit breaker (120-volt model)	1
	86801	918 6801.7	Circuit breaker (220-volt model)	1
56	35468	503 5468.0	Cover, switch	1
57	29708	502 9708.2	Guard, switch	1
58	52203	905 2203.6	Screw, machine, #6–32 x .250 round head	2
	86263	918 6263.9	Nut, conduit, 1/2" lock (not shown: engages the following item)	2
59	54124	905 4124.3	Bushing, strain relief	2
60	37170	503 7170.3	Cord, power, 12 ga. x 72 inches (120-volt model)	1
	05490	500 5490.2	Cord, power, 14 ga. x 84 inches (213 cm) (220-volt model)	1
61	30105	503 0105.5	Guard, right	1
62	22300	502 2300.3	Grip	1
63	50520	905 0520.4	Screw, cap, 1/4–20 x .750 hex head	2
64	51674	905 1674.5	Washer, lock, .259 x .489 x .062 spring	2
65	29792	502 9792.9	Handle	1

Parts List (cont'd)

KEY	UPC NO.	PART NO.	DESCRIPTION	QTY.
66	35997	503 5997.5	Motor, Electric, 120-volt	1
	35998	503 5998.3	Motor, Electric, 220-volt	1
67	53231	905 3231.7	Retaining ring, 1.125, Truarc #5100-112	1
68	53232	905 3232.5	Washer, shim, 1.125 x 2.00 x .031 steel	2
69	04918	500 4918.6	Guard, right outer	1
70	30124	503 0124.1	Sprocket, #40, 47 teeth	1
71	30117	503 0117.9	Chain, roller, #40	1
72	52787	905 2787.9	Connecting link for #40 Chain	1
73	29686	502 9686.8	Washer, flat, 1.14 x 2.00 x .125 fiber	4
74	53198	905 3198.1	Needle bearing (Torrington #BH-2216)	1
75	53200	905 3200.7	Needle bearing (Torrington #BH-2220)	1
76	04917	500 4917.8	Guard, right inner	1
77	53921	905 3921.4	Screw, shoulder, 5/8 x 1.75 x 1/2–13	1
78	35311	503 5311.0	Sheave	1
79	52794	905 2794.1	Nut, hex, 1/2–13	1
80	29664	502 9664.7	Foot	4
81	50579	905 0579.4	Screw, cap, 1/4–20 x .500 socket head	8
82	53965	905 3965.6	Screw, cap, 1/4–20 x .500 Torx button head	2
83	35657	503 5657.7	Washer, flat, .253 x .725 x .070	2
84	29630	502 9630.2	Handle unit, vise chain	2
85	35660	503 5660.7	Positioner unit, chain	2
86	35661	503 5661.5	Vise chain and screw unit, 36"	2
87	37176	503 7176.2	Black wire unit (120V)	1
	35636	503 5636.4	Brown wire unit (220V)	
88	37175	503 7175.4	White wire unit (120V)	1
	35637	503 5637.4	Blue wire unit (220V)	
89	86485	918 6485.2	Wire nut	1

Repair Kit

*	06222	500 6222.0	Countershaft and Bearing Unit (includes items marked with an asterisk)	

Decals and Nameplate for the Super Tugger®:

	29793	502 9793.7	Nameplate (120-volt model)	1
	31475	503 1475.0	Nameplate (220-volt model)	1
	52192	905 2192.7	Screw, self-tapping, #6–7 x .250 round head (for nameplate)	4
	29936	502 9936.0	Decal, Capstan Rotation	1
	35663	503 5663.1	Decal, Read IM (120-volt model)	1
	53987	503 5987.8	Decal, Read IM (220-volt model)	1
	35705	503 5705.0	Decal, Rope Path	1
	35706	503 5706.9	Decal, Mounting	1
	36276	503 6276.3	Decal, Caution, Rope	1
	93576	999 3576.7	Decal, Technical Assistance	1

Exploded View

Motor and Gearbox

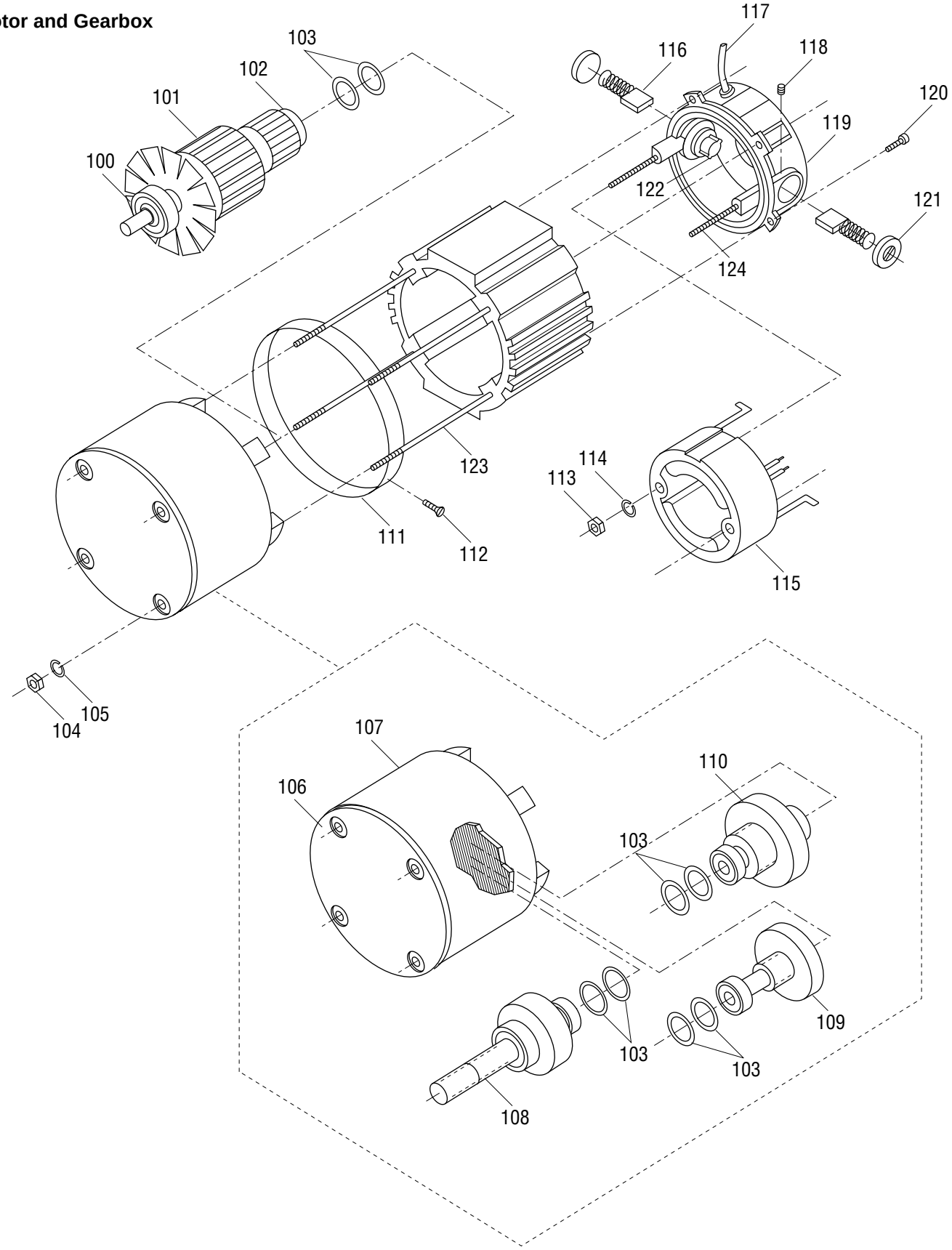

Parts List

Motor and Gearbox

KEY	UPC NO.	PART NO.	DESCRIPTION	QTY.
100	86071	918 6071.7	Bearing, armature (fan end)	1
101	86064	918 6064.4	Armature (120-volt model)	1
	86757	918 6757.6	Armature (220-volt model)	1
102	86072	918 6072.5	Bearing, armature (cap end)	1
103	86073	918 6073.3	Washer, Belleville	8
104	50189	905 0189.6	Nut, 1/4–28 UNF	4
105	50749	905 0749.5	Washer, lock, .262 x .469 x .026, internal tooth	4
106	86273	918 6273.6	Plate, end	1
107	86272	918 6272.8	Housing, gear box	1
108	86276	918 6276.0	Gear shaft, output assembly (includes bearings)	1
109	86274	918 6274.4	Gear shaft, drive assembly (includes bearings)	1
110	86275	918 6275.2	Gear shaft, driven assembly (includes bearings)	1
111	30128	503 0128.4	Screen, motor	1
112	51841	905 1841.1	Screw, thread-cutting, #5–40 x .250 pan head	4
113	51686	905 1686.9	Nut, hex, #10–32 full	2
114	50750	905 0750.9	Washer, lock, .200 x .373 x .023, internal tooth	2
115	86065	918 6065.2	Field (120-volt model)	1
	86145	918 6145.5	Field (220-volt model)	1
116	86707	918 6067.9	Brush	2
117	86066	918 6066.0	Power cord (120-volt model)	1
	86147	918 6147.0	Power cord (220-volt model)	1
118	51194	905 1194.8	Screw, set, #10–32 x .187 socket cup (for the brush holder)	2
119	86102	918 6102.0	End cap assembly	1
120	50577	905 0577.8	Screw, cap, #10–32 x .750 socket head	4
121	86068	918 6068.7	Cap, brush	2
122	86069	918 6069.5	Holder, brush	2
123	86922	918 6922.6	Rod, threaded, 1/4–28 x 6.093	4
124	86923	918 6923.4	Rod, threaded, #8–32 x 2.500	2

Exploded View

503 7179.7—Force Gauge Unit with Serial Code ZT (120-Volt Model)

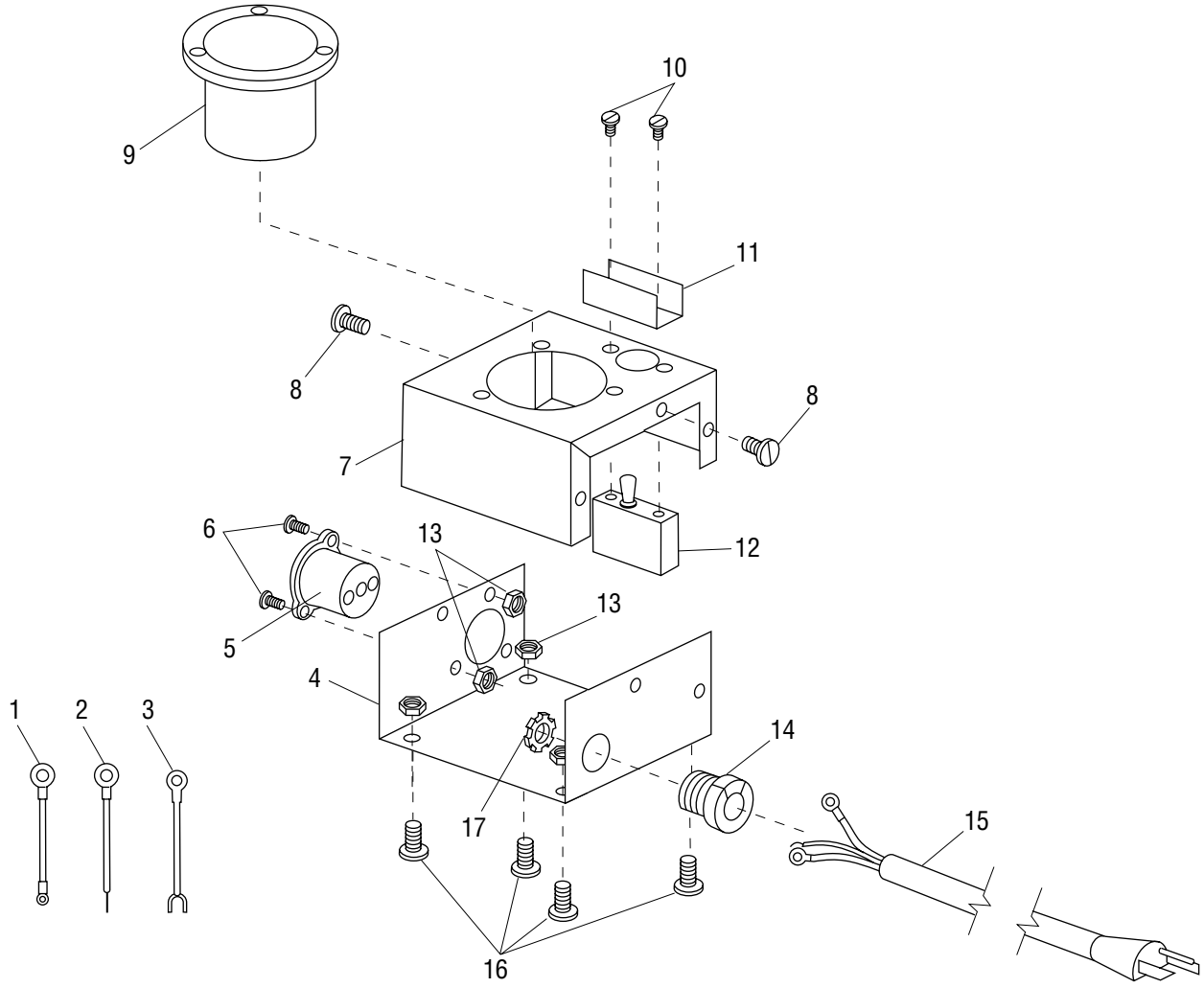

Parts List

503 7179.7—Force Gauge Unit with Serial Code ZT (120-Volt Model)

KEY	UPC NO.	PART NO.	DESCRIPTION	QTY.
	37179	503 7179.7	Force Gauge Unit	
1	37162	503 7162.2	Wire, 12 ga. x 3.00, black	1
2	37163	503 7163.0	Wire, 12 ga. x 7.00, black	1
3	37164	503 7164.9	Wire, 12 ga. x 4.00, green	1
4	37108	503 7108.8	Box	1
5	86684	918 6684.7	Receptacle, female	1
6	51440	905 1440.8	Screw, machine, #8–32 x .375 round head	2
7	37107	503 7107.0	Cover	1
8	53194	905 3194.9	Screw, self-tapping, #10– 16 x .250 Phillips head	6
9	31646	503 1646.0	Meter (supplied with hardware)	1
10	52203	905 2203.6	Screw, machine, #6–32 x .250 round head	2
11	29708	502 9708.2	Guard, switch	1
12	86383	918 6383.0	Switch, toggle, 120-volt, single-pole (supplied with hardware)	1
13	50633	905 0633.2	Nut, hex, #8–32	4
14	54124	905 4124.3	Bushing, strain relief	1
15	37170	503 7170.3	Cord, power, 12 ga. x 6'	1
16	53934	905 3934.6	Bumper, #8–32 machine screw, rubber	4
17	86263	918 6263.9	Nut, lock, 1/2" conduit	1

Decals for the Force Gauge:

	30392	503 0392.9	Decal, Damp Warning	1
	32718	503 2718.6	Decal, Adjustment Zero	1
	37895	503 7895.3	Decal, Identification (120-volt model)	1

Exploded View

500 5485.6—Force Gauge Unit with Serial Code ADZ (220-Volt Model)

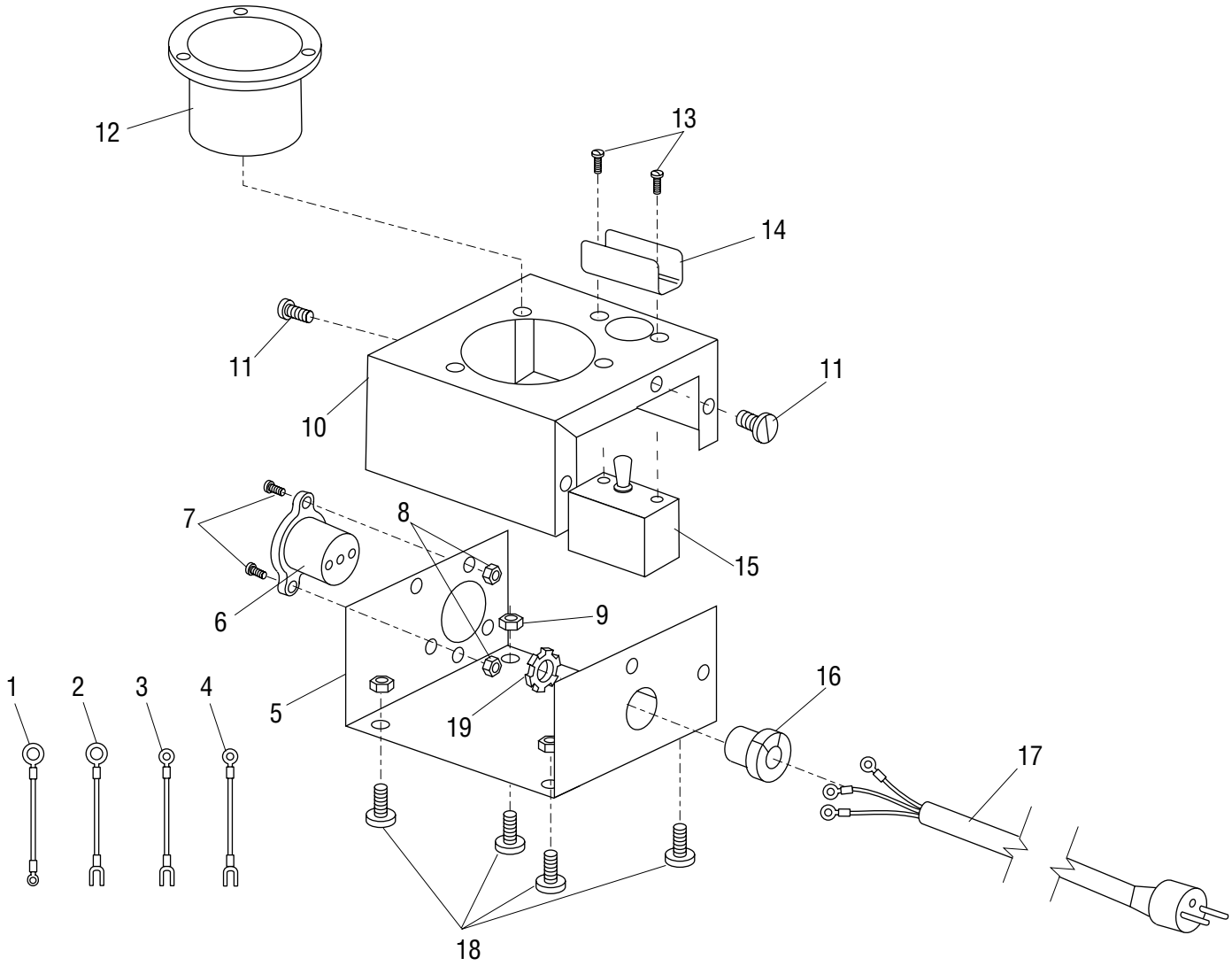

Parts List

500 5485.6—Force Gauge Unit with Serial Code ADZ (220-Volt Model)

KEY	UPC NO.	PART NO.	DESCRIPTION	QTY.
	05485	500 5485.6	Force Gauge Unit	
1	31480	503 1480.7	Wire, 14 ga. x 3.00, brown	1
2	35631	503 5631.3	Wire, 14 ga. x 6.00, brown	1
3	31478	503 1478.5	Wire, 14 ga. x 5.00, green with yellow stripe	1
4	35632	503 5632.1	Wire, 14 ga. x 6.00, blue	1
5	05487	500 5487.2	Box, lower	1
6	86912	918 6912.9	Receptacle, female	1
7	50278	905 0278.7	Screw, cap, #6–32 x .500 socket head	2
8	50632	905 0632.4	Nut, hex, #6–32	2
9	50633	905 0633.2	Nut, hex, #8–32	4
10	37107	503 7107.0	Box, upper	1
11	53194	905 3194.9	Screw, self-tapping, #10–16 x .250 Phillips head	6
12	31469	503 1469.6	Meter (supplied with hardware)	1
13	52203	905 2203.6	Screw, machine, #6–32 x .250 round head	2
14	29708	502 9708.2	Guard, switch	1
15	86413	918 6413.5	Switch, toggle, 220V, DPDT	1
16	54124	905 4124.3	Bushing, strain relief	1
17	07937	500 7937.9	Cord, power, 14 ga. x 6.5' (198 cm)	1
18	53934	905 3934.6	Bumper, #8–32 machine screw, rubber	4
19	86263	918 6263.9	Nut, lock, 1/2" conduit	1

Decals for the Force Gauges:

	30392	503 0392.9	Decal, Damp Warning	1
	32718	503 2718.6	Decal, Adjustment Zero	1
	05489	500 5489.9	Decal, Identification (220-volt model)	1

Wiring Diagram

Super Tugger® and Force Gauges

120 Volt

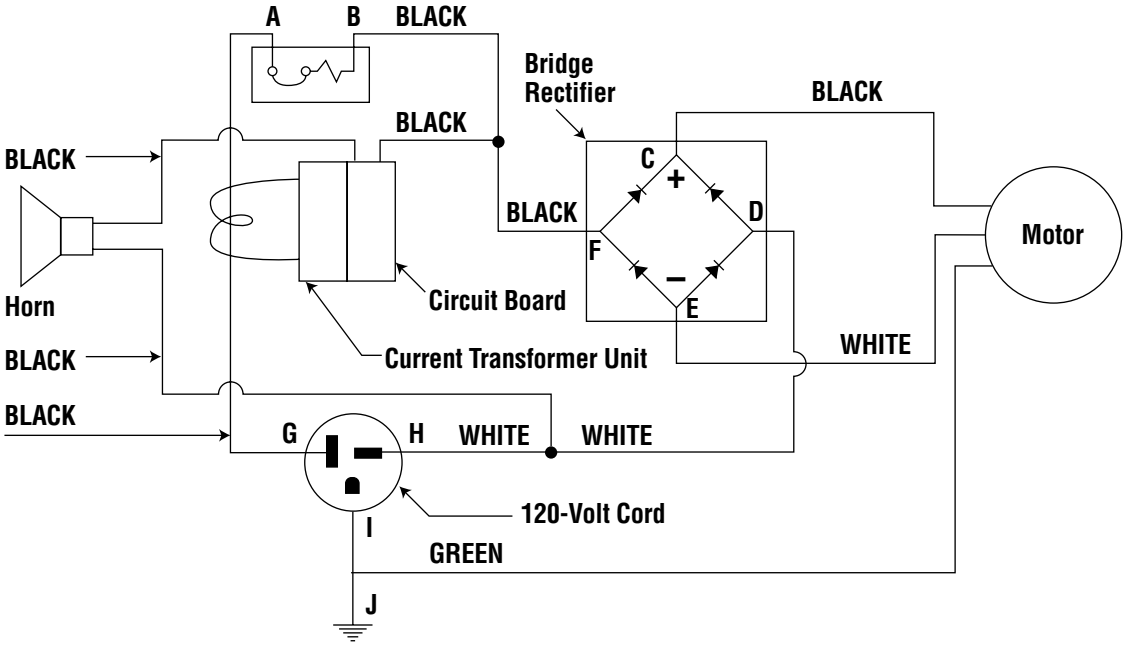

220 Volt

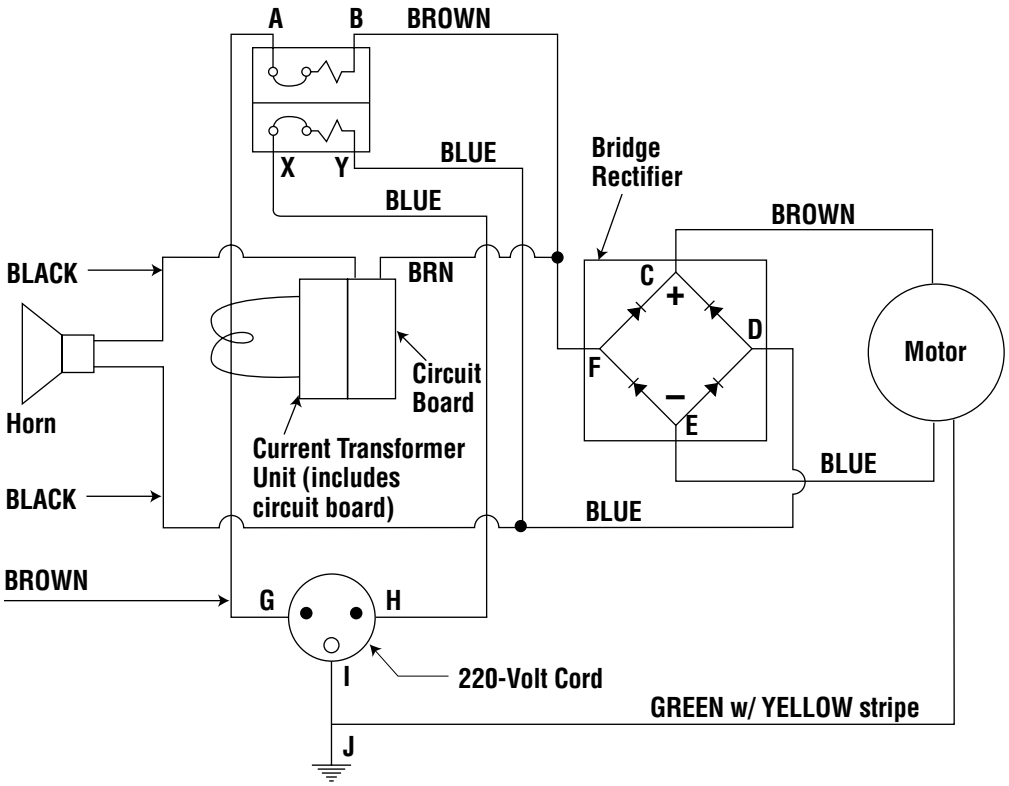

Wiring Diagrams

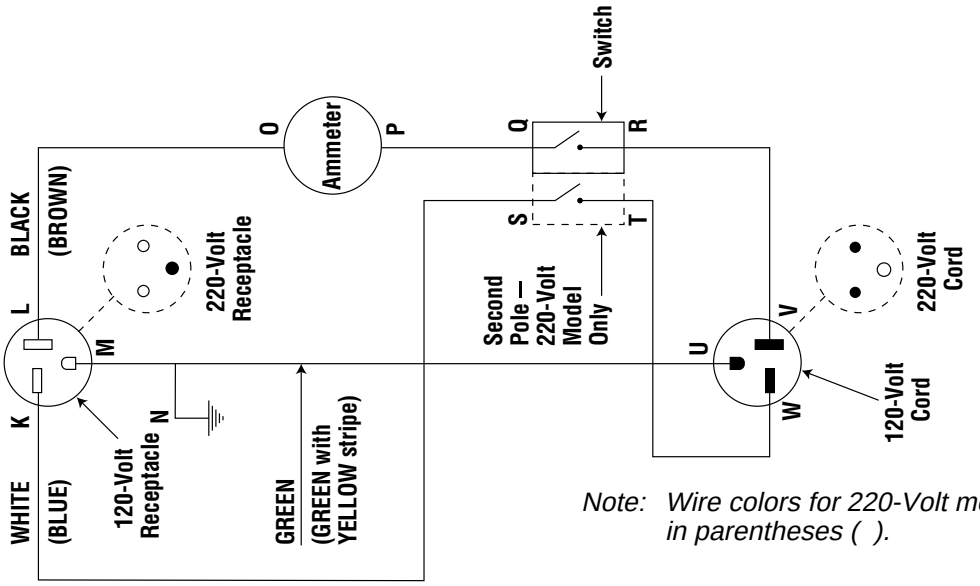

Note: Wire colors for 220-Volt model appear in parentheses ( ).

37179 Force Gauge (120-Volt)

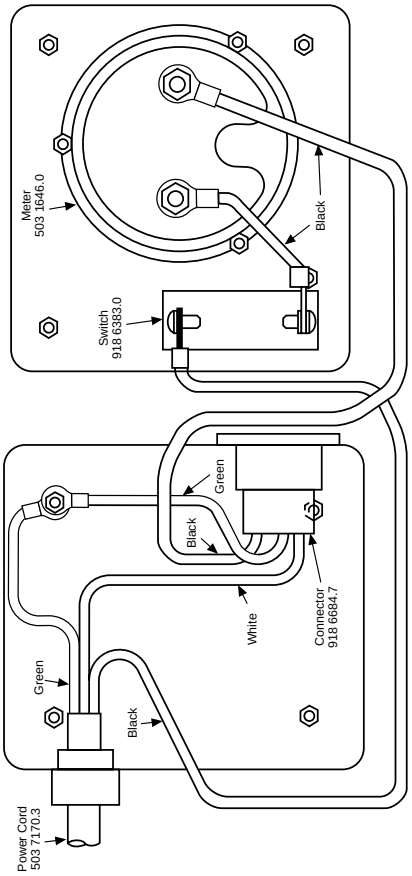

05485 Force Gauge (220-Volt)

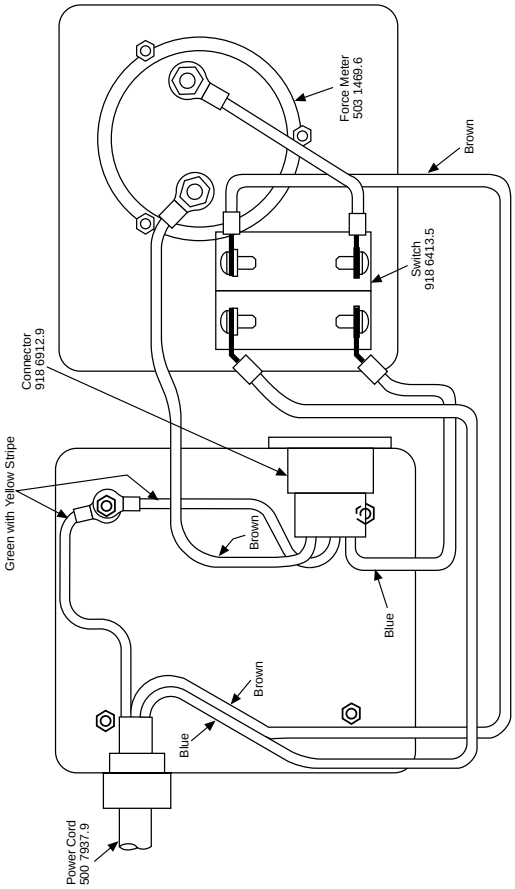

GREENLEE TEXTRON

Greenlee Textron / Subsidiary of Textron Inc.
4455 Boeing Drive, Rockford, IL 61109-2988 USA
Customer Service (International): 815/397-7070 • Fax: 815/397-9247
Customer Service (North America): 800/435-0786 • Fax: 800/451-2632, 815/397-1865
Canada Fax: 800/524-2853

Printed in the U.S.A.